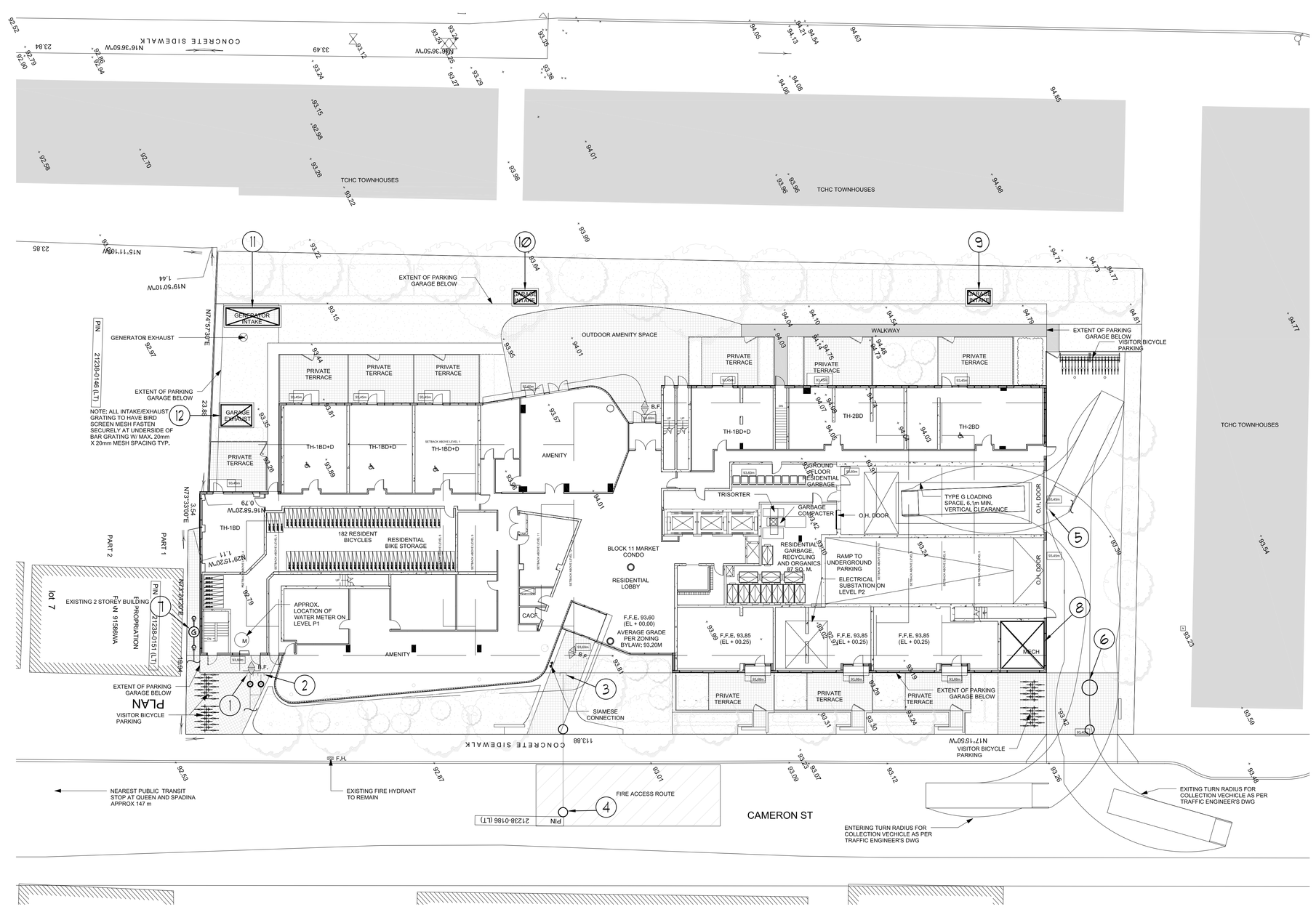

ALEXANDRA PARK (#1313)
MECHANICAL DRAWING LIST

		SCALE	√
M-1	SITE PLAN	1:200	√
M-2	P-2 FLOOR PLAN - SUB-SLAB DRAINAGE LAYOUT	1:100	
M-3	P-2 FLOOR PLAN - MECHANICAL LAYOUT	1:100	
M-4	P-1 FLOOR PLAN - HVAC LAYOUT	1:100	
M-5	P-1 FLOOR PLAN - P&D LAYOUT	1:100	
M-6	G/F - SOUTH HVAC DUCTWORK LAYOUT	1:50	
M-7	G/F - NORTH HVAC DUCTWORK LAYOUT	1:50	
M-8	G/F - SOUTH HVAC PIPING LAYOUT	1:50	
M-9	G/F - NORTH HVAC PIPING LAYOUT	1:50	
M-10	G/F - SOUTH P&D LAYOUT	1:50	
M-11	G/F - NORTH P&D LAYOUT	1:50	
M-12	2/F - SOUTH MECHANICAL LAYOUT	1:50	
M-13	2/F - NORTH MECHANICAL LAYOUT	1:50	
M-14	3/F - SOUTH MECHANICAL LAYOUT	1:50	
M-15	3/F - NORTH MECHANICAL LAYOUT	1:50	
M-16	4/F - SOUTH MECHANICAL LAYOUT	1:50	
M-17	4/F - NORTH MECHANICAL LAYOUT	1:50	
M-18	5/F - SOUTH MECHANICAL LAYOUT	1:50	
M-19	5/F - NORTH MECHANICAL LAYOUT	1:50	
M-20	6/F - SOUTH MECHANICAL LAYOUT	1:50	
M-21	6/F - NORTH MECHANICAL LAYOUT	1:50	
M-22	7/F - SOUTH MECHANICAL LAYOUT	1:50	
M-23	7/F - NORTH MECHANICAL LAYOUT	1:50	
M-24	8/F - SOUTH MECHANICAL LAYOUT	1:50	
M-25	8/F - NORTH MECHANICAL LAYOUT	1:50	
M-26	9/F - SOUTH MECHANICAL LAYOUT	1:50	
M-27	9/F - NORTH MECHANICAL LAYOUT	1:50	
M-28	10/F - MECHANICAL LAYOUT	1:50	
M-29	11/F - MECHANICAL LAYOUT	1:50	
M-30	12/F - MECHANICAL LAYOUT	1:50	
M-31	13/F - MECHANICAL LAYOUT	1:50	
M-32	14/F - MECHANICAL LAYOUT	1:50	
M-33	ROOF - HVAC PIPING AND P&D LAYOUT	1:25	
M-34	SYSTEM WATER RISER DIAGRAM	N.T.S.	
M-35	DCW, DHW & DHWR RISER DIAGRAM	N.T.S.	
M-36	PRESSURIZATION / VENTILATION RISER DIAGRAM	N.T.S.	
M-37	SCHEMATICS	N.T.S.	
M-38	DETAILS ¶	N.T.S.	
M-39	SCHEDULES	N.T.S.	

NOTES:

1. INCOMING 50ø FIRE LINE. SEE SITE SERVICE ENGINEER'S DRAWINGS FOR DETAILS.
2. INCOMING 100ø DCW. SEE SITE SERVICE ENGINEER'S DRAWINGS FOR DETAILS.
3. 300ø SAN LEAVING PIPE @ 2% AT INV. 89.00. SEE SITE SERVICE ENGINEER'S DRAWINGS FOR DETAILS.
4. XXXø MANHOLE BY OTHERS.
5. 250ø STORM LEAVING PIPE @ 2% AT INV. 91.13. SEE SITE SERVICE ENGINEER'S DRAWINGS FOR DETAILS.
6. XXXø STORM MANHOLE BY OTHERS.
7. INCOMING GAS STATION C/W 5 LB. REGULATOR AND METERS BY ENBRIDGE.
   APPROX. BUILDING LOAD= XXX CFH
   APPROX. EMERGENCY GENERATOR = XXX CFH
   xxø (5 LB) FOR BUILDING AND xxø (5 LB) FOR GENERATOR DOWN TO P-1.
   PROVIDE LABEL ON EMERGENCY GENERATOR SHUT-OFF VALVE:
   "EMERGENCY GENERATOR SUPPLY - DO NOT CLOSE".
   SEE "ENBRIDGE GAS METER/REGULATING STATION DETAIL" ON THIS DRAWING FOR DETAIL.
8. 4,200x4,700 (19.7 M^2, 212.5 FT^2) FRESH AIR INTAKE SHAFT FOR P-1 & P-2 LEVEL AND MAU-1.
9. 2,250x1,300 (2.93 M^2, 31.5 FT^2) FRESH AIR INTAKE SHAFT FOR P-1 LEVEL C/W GRATE BY OTHERS.
10. 2,250x1,300 (2.93 M^2, 31.5 FT^2) FRESH AIR INTAKE SHAFT FOR P-2 LEVEL C/W GRATE BY OTHERS.
11. 5,200x1,700 (8.84 M^2, 95 FT^2) AIR SHAFT FOR GENERATOR INTAKE & EXHAUST C/W GRATE BY OTHERS.
12. 3,100x2,000 (6.2 M^2, 68 FT^2) EXHAUST AIR SHAFT FOR P-1 & P-2 LEVEL C/W GRATE BY OTHERS.

LEGEND
SITE MECHANICAL

SYMBOL	DESCRIPTION
	SANITARY ABOVE GRADE
	SANITARY BELOW GRADE
	STORM ABOVE GRADE
	STORM BELOW GRADE
	DOMESTIC COLD WATER
G	GAS LINE
F	FIRE LINE
	CATCH BASIN
	DOUBLE CATCH BASIN
	MAN HOLE
	CATCH BASIN MAN HOLE
G	GAS METER
W	WATER METER
RD	ROOF DRAIN
	ELBOW UP
	ELBOW DOWN
CO	WALL CLEANOUT
CO	FLOOR CLEANOUT
	SIAMESE CONNECTION
ENT. INV.	ENTERING INVERT
LVG. INV.	LEAVING INVERT

PROD/ITY	I	ISSUED FOR ---	E.P.
DATE	NO	DESCRIPTION	BY

PLANK VOID: ALL PRINTS DATED PREVIOUS TO FINAL DATE ABOVE

REVISIONS

CONTRACTOR MUST CHECK AND VERIFY ALL DIMENSIONS AND CONDITIONS ON THE JOB AND REPORT DISCREPANCIES TO THE ENGINEERS BEFORE PROCEEDING WITH THE WORK. THIS DRAWING IS THE PROPERTY OF THE ENGINEERS AND MUST BE RETURNED UPON COMPLETION OF THE WORK.

DRAWINGS ARE NOT TO BE SCALED

NOVA TREND ENGINEERING SERVICES

179 West Beaver Creek Road, Unit 31
Richmond Hill, Ontario L4B 3M1
Tel: 905 882-5445
Fax: 905 882-5447
Email: cad@novatrendeng.com

DRAWING TITLE:
SITE PLAN

PROJECT TITLE:
ALEXANDRA PARK

XXX
TORONTO ONTARIO

DRAWN BY:	CHECKED BY:	SCALE:
G.S.	E.P.	1:200
DATE:	PROJECT NUMBER:	DRAWING NUMBER:
FEB. 13	1313	M-1 OF 39

Drawing name: \\CADSERVER\Current Dwgs\1313\1313M - 1 (SITE PLAN).dwg Plotted: Mar 12, 2014 - 3:35pm

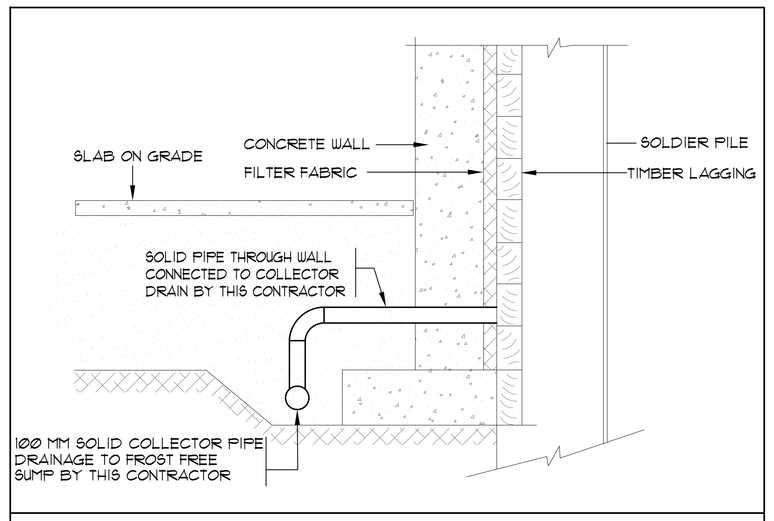

WEEPING TILE INSTALLATION DETAILS
N.T.S.

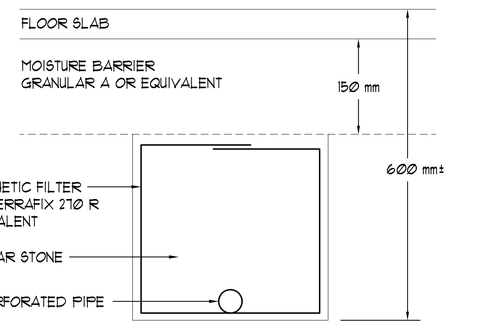

NOTES:
1) THE DRAINAGE TILE SHOULD BE INSTALLED ON A POSITIVE GRADIENT LEADING TO A FROST FREE SUMP.
2) THE MAXIMUM DISTANCE BETWEEN THE DRAINAGE TILES, PLACED IN PARALLEL ROWS, SHOULD NOT EXCEED 6m.
3) THE JOINTS BETWEEN THE FILTER FABRIC SHOULD OVERLAP AND THERE SHOULD BE NO GAPS OR TEARS IN THE FABRIC TO PREVENT LOSS OF FINES.

SUBFLOOR DRAINAGE DETAIL
N.T.S.

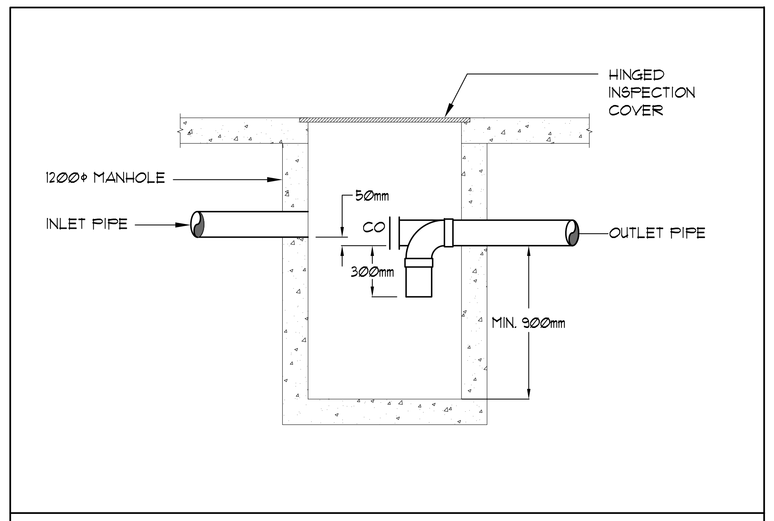

SAND TRAP DETAIL
N.T.S.

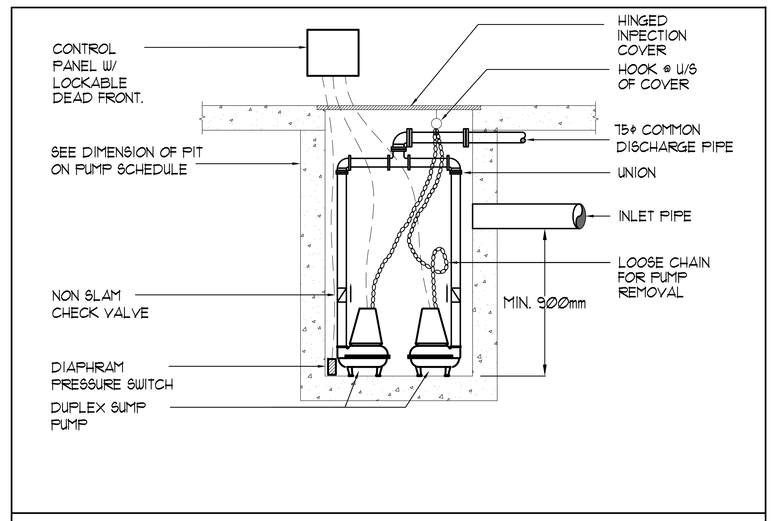

TYPICAL SUMP PIT DETAIL
N.T.S.

REFER TO DWG. M-X FOR GENERAL AND ACOUSTIC NOTES

-/- -mm CLEAR
FLOOR TO UNDERSLAB

NOTES:

1
2
3
4

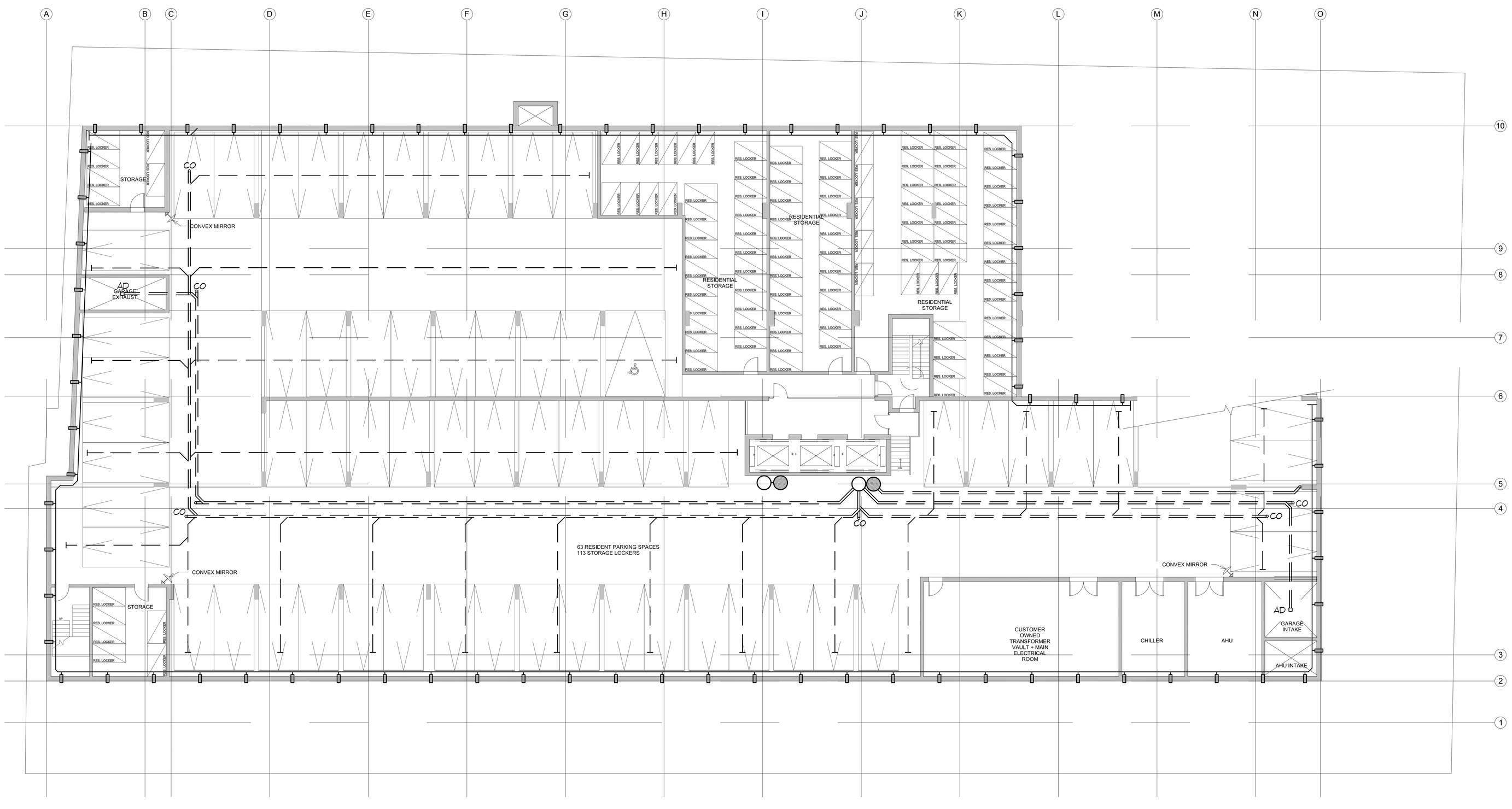

LEGEND
MECHANICAL

SYMBOL	DESCRIPTION
	SUPPLY AIR DIFFUSER
	SUPPLY AIR TROFFER
	LINEAR SUPPLY DIFFUSER
T	THERMOSTAT
S	FAN SWITCH
	RETURN AIR GRILLE
	EXHAUST AIR GRILLE
	SUPPLY DUCT UP
	SUPPLY DUCT DOWN
	RETURN DUCT UP
	RETURN DUCT DOWN
	EXHAUST DUCT UP
	EXHAUST DUCT DOWN
FD	FIRE DAMPER
BD	BALANCING DAMPER
MD	MOTORIZED DAMPER
MFD	MOTORIZED FIRE DAMPER
BDD	BACKDRAFT DAMPER
OBD	OPPOSED BLADE VOLUME CONTROL DAMPER C/G LOCKING QUADRANT
	TURNING VANES
	FLEXIBLE CONNECTION
	ACOUSTIC INSULATION
XX	-TYPE OF EQUIPMENT -EQUIPMENT IDENTIFICATION
XXX	-TYPE OF DIFFUSER OR GRILLE -GRILLE SIZE OR DIFFUSER NECK SIZE -AIRFLOW CFM OR L/s
	STARTER / 3 PHASE / 1 PHASE /
S	N-SUITE ERV MASTER SWITCH
S	FAN SWITCH / N-SUITE ERV OVERRIDE BUTTON
CO	CO SENSOR
G	GAS LINE
G	GAS METER
G	GAS COOK
	PRESSURE REDUCING VALVE
	SANITARY ABOVE GRADE
	SANITARY BELOW GRADE
	STORM ABOVE GRADE
	STORM BELOW GRADE
	DOMESTIC COLD WATER
	DOMESTIC HOT WATER
	DOMESTIC HOT WATER RECIRCULATION
	SANITARY VENT
	WATER METER
FD	FLOOR DRAIN
FFD	FUNNEL FLOOR DRAIN
HD	HUB DRAIN
RD	ROOF DRAIN
SLD	SLAB DRAIN
AD	AREA DRAIN
BLAD	BI-LEVEL AREA DRAIN
CB	CATCH BASIN
	SANITARY TRAP
	ELBOW UP
	ELBOW DOWN
CO	WALL CLEANOUT
CO	FLOOR CLEANOUT
HB	HOSE BIBB
NFHB	NON-FREEZE HOSE BIBB
	GLOBE VALVE
	GATE VALVE
	BALL VALVE
	BUTTERFLY VALVE
	PRESSURE REDUCING VALVE
	CHECK VALVE
	CAP
	COMPRESSED AIR OUTLET
N	BACKFLOW PREVENTER
	CIRCUIT BALANCING VALVE
	MULTIPLE PIPES / / - DENOTES NO. OF PIPES
T	TEMPERATURE SENSOR
T	THERMOMETER
	2-WAY MODULATING VALVE
	3-WAY MODULATING VALVE
	10"x4"(1) THERMOWELL C/G 1/2" BUSHING x 1/2" PLUG
XXX	-FLOOR ELEVATION ABOVE LEVEL
XXX	-FLOOR ELEVATION THIS LEVEL
XXX	-HEADROOM (FLOOR TO U/S HEIGHT)

PROD/ITY	1	ISSUED FOR ---	E.P.
DATE	NO.	DESCRIPTION	BY

MARK VOID ALL PRINTS DATED PREVIOUS TO FINAL DATE ABOVE

REVISIONS

CONTRACTOR MUST CHECK AND VERIFY ALL DIMENSIONS AND CONDITIONS ON THE JOB AND REPORT DISCREPANCIES TO THE ENGINEERS BEFORE PROCEEDING WITH THE WORK. THIS DRAWING IS THE PROPERTY OF THE ENGINEERS AND MUST BE RETURNED UPON COMPLETION OF THE WORK.

DRAWINGS ARE NOT TO BE SCALED

NOVA TREND DEVELOPMENT

175 West Beaver Creek Road, Unit 31
Richmond Hill, Ontario L4B 3M1
Tel: 905 882-9445
Fax: 905 882-9447
Email: cad@novatrendeng.com

DRAWING TITLE:
P-2 FLOOR PLAN
SUB -SLAB DRAINAGE LAYOUT

PROJECT TITLE:
ALEXANDRA PARK

XXX
TORONTO ONTARIO

DRAWN BY:	CHECKED BY:	SCALE:
G.S.	E.P.	1:100
DATE: FEB, 13	PROJECT NUMBER: 1313	DRAWING NUMBER: M-2 OF 39

Drawing name: \\CADSERVER\Current Dwg\1313\1313M- 2P-2 PLAN - SUB-SLAB DRAINAGE LAYOUT(3).dwg Plotted: Mar 12, 2014 - 3:39pm

SANITARY PIT SP-1, SP-2

QTY.	DESCRIPTION
2	BARNES 25E-1054L SUBMERSIBLE PUMPS INSIDE A 1200MM SUMP PIT, EACH C/W 1 HP, 575 VOLT, 3 PHASE, 60 CYCLE MOTOR WITH 20 FT POWER CORD, 2" N.P.T. DISCHARGE, HANDLES 2" DIAMETER SOLIDS AND DELIVERS 50 U.S. G.P.M. AT 30 FT TOTAL HEAD.
1	LDP 575 DUPLEX ELECTRICAL ALTERNATOR STARTER AND CONTROL PANEL WITH LOCKABLE DEAD-FRONT, 575 VOLT, 3 PHASE, 60 CYCLE C/W H.O.A. SELECTOR SWITCHES, RUN LIGHTS, THERMAL OVERLOAD HEATERS TO SUIT PUMP MOTORS WITH RESET BUTTON, AND CIRCUIT BREAKERS IN EEMAC 3R ENCLOSURE.
4	LS 20 MECHANICAL LEVEL SENSORS, 1 FOR PUMP "ON", 1 FOR PUMP "OFF", 1 FOR BOTH PUMPS "ON", AND 1 FOR ALARM LEVEL.
1	LHW 115 HIGH WATER ALARM PANEL, 115 VOLT, 1 PHASE WITH PILOT LIGHT, ON-OFF-TEST SWITCH, BUZZER AND EXTRA RELAY FOR REMOTE SIGNALING, IN EEMAC 1 ENCLOSURE.
1	TRIM BAR CURB FRAME C/W CHECKERED COVER PLATE IN 2 SECTIONS, FOR INSPECTION AND ACCESS.

STORM PIT STP-1, STP-2

QTY.	DESCRIPTION
2	BARNES 25E-1054L SUBMERSIBLE PUMPS INSIDE A 1200MM SUMP PIT, EACH C/W 1 HP, 575 VOLT, 3 PHASE, 60 CYCLE MOTOR WITH 20 FT POWER CORD, 2" N.P.T. DISCHARGE, HANDLES 2" DIAMETER SOLIDS AND DELIVERS 50 U.S. G.P.M. AT 30 FT TOTAL HEAD.
1	LDP 575 DUPLEX ELECTRICAL ALTERNATOR STARTER AND CONTROL PANEL WITH LOCKABLE DEAD-FRONT, 575 VOLT, 3 PHASE, 60 CYCLE C/W H.O.A. SELECTOR SWITCHES, RUN LIGHTS, THERMAL OVERLOAD HEATERS TO SUIT PUMP MOTORS WITH RESET BUTTON, AND CIRCUIT BREAKERS IN EEMAC 3R ENCLOSURE.
4	LS 20 MECHANICAL LEVEL SENSORS, 1 FOR PUMP "ON", 1 FOR PUMP "OFF", 1 FOR BOTH PUMPS "ON", AND 1 FOR ALARM LEVEL.
1	LHW 115 HIGH WATER ALARM PANEL, 115 VOLT, 1 PHASE WITH PILOT LIGHT, ON-OFF-TEST SWITCH, BUZZER AND EXTRA RELAY FOR REMOTE SIGNALING, IN EEMAC 1 ENCLOSURE.
1	TRIM BAR CURB FRAME C/W CHECKERED COVER PLATE IN 2 SECTIONS, FOR INSPECTION AND ACCESS.

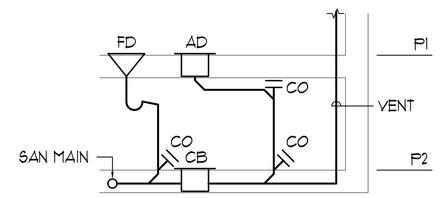

NOTE:
PRIME AND VENT TRAP OF FD/CB PER OBC PART 7 SECTION 7.5 (TYPICAL).

PARKING AREA DRAIN/CATCH BASIN SCHEMATIC

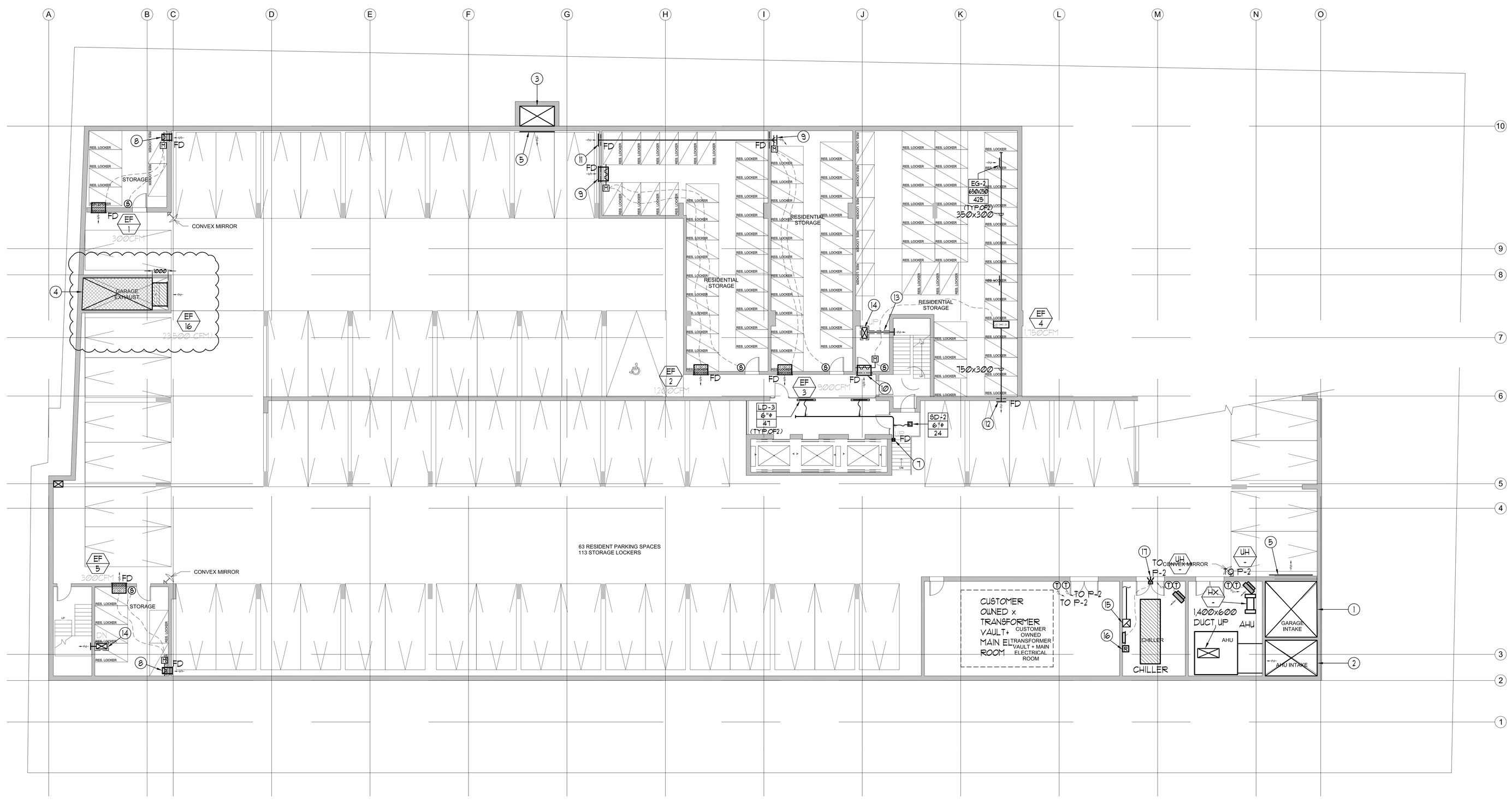

GENERAL NOTES:

1) CONTRACTOR SHALL CO-ORDINATE ARCHITECTURAL, STRUCTURAL, LIGHTING, HVAC, SPRINKLER DRAWINGS TO AVOID AREAS OF CONFLICT AND TO MAINTAIN CEILING HEIGHTS.

2) CONTRACTOR SHALL REPORT ALL DISCREPANCIES AND AREAS OF CONFLICT TO THE ENGINEER PRIOR TO BEGINNING WORK.

3) MINIMUM HEAD ROOM IS 2100 mm ABOVE FINISH FLOOR LEVEL.

4) WHERE THERE IS A DROPPED CEILING, GAS PIPING SHALL BE HUNG BELOW AND TIGHT TO CEILING.

5) ALL EQUIPMENT TO BE INSTALLED PER SPECIFICATION AND MANUFACTURER'S INSTALLATION MANUAL. PROVIDE ACCESS PANEL FOR CONCEALED EQUIPMENT VALVES, ETC.

6) ALLOW 3M SEPARATION BETWEEN THE CONNECTION OF THE MAIN SANITARY RISER AND ITS AUXILIARY RISER.

7) ALL SANITARY PIPE OUTSIDE OF HEATED CEILING SPACE SHALL BE INSULATED, CANVASSED AND PAINTED.

8) ALL VENTS SHALL COMPLY WITH O.B.C. AND PLUMBING CODE.

9) FOR STORAGE ROOM VENTILATION SYSTEM, DIV.16 TO PROVIDE CONDUIT, WIRING AND SWITCH TO START / STOP FAN & DAMPER. FAN AND 110V ACTUATOR TO BE SUPPLIED AND INSTALLED BY DIV. 15.

10) FOR UTILITY ROOM VENTILATION SYSTEM, DIV.15 WILL PROVIDE LINE VOLTAGE THERMOSTAT TO DIV.16. DIV.16 TO PROVIDE CONDUIT & WIRING TO START/STOP FAN & DAMPER VIA THERMOSTAT. FAN AND 110V ACTUATOR TO BE SUPPLIED AND INSTALLED BY DIV. 15.

11) FOR UNIT HEATER, DIV. 15 TO PROVIDE LINE VOLTAGE THERMOSTAT TO DIV. 16. DIV. 16 TO PROVIDE CONDUIT & WIRING TO START/STOP UNIT HEATER.

12) FIRE DAMPERS ARE REQUIRED TO BE LISTED AND ARE TO HAVE FIRE-PROTECTION RATING OF THE PENETRATED FIRE SEPARATION.

13) THE PIPING PENETRATING THE VARIOUS FIRE SEPARATION IS REQUIRED TO BE FIRESTOPPED WITH A LISTED FIRESTOPPING MATERIAL IN ACCORDANCE WITH OBC ARTICLE 3.1.9.1.

14) DIV. 16 TO PROVIDE START/STOP FOR ALL THE MAIN GARAGE EXHAUST FANS INSIDE CACF ROOM.

15) ALL TRAPS & PRIMERS TO BE HEAT TRACED BY DIV.16, INSULATED & JACKETTED BY THIS CONTRACTOR.

⚠ 2550 mm CLEAR FLOOR TO UNDERSLAB

NOTES:

1. 3,300x3,600 (12.26 M^2, 132 FT^2) FRESH AIR INTAKE SHAFT FOR P-1 & P-2 LEVEL.
2. 3,300x2,300 (7.8 M^2, 84 FT^2) FRESH AIR INTAKE SHAFT FOR MAU.
3. 2,250x1,300 (2.93 M^2, 31.5 FT^2) FRESH AIR SHAFT FOR P-2 LEVEL.
4. 5,500x2,000 (11.61 M^2, 125 FT^2) EXHAUST AIR SHAFT FOR P-1 & P-2 LEVEL.
5. 3,100x2,000 WEATHERPROOF INTAKE LOUVRE C/W BIRDSCREEN. (16,500 CFM)
6. 2,000x1,300 WEATHERPROOF INTAKE LOUVRE C/W BIRDSCREEN. (7,000 CFM)
7. 200x200 FRESH AIR DUCT FROM ABOVE C/W FIRE DAMPER AT SLAB.
8. 400x200 INTAKE LOUVRE C/W MOTORIZED DAMPER, FIRE DAMPER & WIRE MESH.
9. 800x400 INTAKE LOUVRE C/W MOTORIZED DAMPER, FIRE DAMPER & WIRE MESH.
10. 800x800 INTAKE LOUVRE C/W MOTORIZED DAMPER, FIRE DAMPER & WIRE MESH.
11. 800x400 INTAKE LOUVRE C/W FIRE DAMPER& WIRE MESH.
12. 600x400 EXHAUST LOUVRE C/W FIRE DAMPER & WIRE MESH.
13. DUCT INSIDE 2Hr FIRE RATED ENCLOSURE. ENCLOSURE BY OTHERS.
14. 700x350 STAIR PRESSURIZATION DUCT FROM ABOVE C/W FIRE RATED ENCLOSURE. FIRE RATED ENCLOSURE BY OTHERS.
15. ---x--- DUCT DOWN TO 450 mm AFFL C/W OPEN END AND WIRE MESH.
16. REFRIGERANT MONITORING MASTER & SLAVE PANELS AND SENSOR. SLAVE PANEL SHOWING STATUS OF REFRIGERATION MONITORING SYSTEM TO BE MOUNTED OUTSIDE OF CHILLER ROOM. UPON SENSING OF REFRIGERANT LEAKAGE CHILLER WILL BE SHUT DOWN AND EF-10 TO BE ACTIVATED TO RUN IN HIGH SPEED.
17. ALARM STROBE LIGHT SUPPLIED AND WIRED TO THE REFRIGERANT MONITORING SYSTEM BY MECHANICAL CONTRACTOR.

LEGEND MECHANICAL

SYMBOL	DESCRIPTION
	SUPPLY AIR DIFFUSER
	SUPPLY AIR TROFFER
	LINEAR SUPPLY DIFFUSER
T	THERMOSTAT
S	FAN SWITCH
	RETURN AIR GRILLE
	EXHAUST AIR GRILLE
	SUPPLY DUCT UP
	SUPPLY DUCT DOWN
	RETURN DUCT UP
	RETURN DUCT DOWN
	EXHAUST DUCT UP
	EXHAUST DUCT DOWN
FD	FIRE DAMPER
BD	BALANCING DAMPER
MD	MOTORIZED DAMPER
MFD	MOTORIZED FIRE DAMPER
BDD	BACKDRAFT DAMPER
OBD	OPPOSED BLADE VOLUME CONTROL DAMPER C/W LOCKING QUADRANT
	TURNING VANES
	FLEXIBLE CONNECTION
	ACOUSTIC INSULATION
	TYPE OF EQUIPMENT / EQUIPMENT IDENTIFICATION
	TYPE OF DIFFUSER OR GRILLE / GRILLE SIZE OR DIFFUSER NECK SIZE / AIRFLOW (CFM) OR L/S
	STARTER / 3 PHASE / 1 PHASE /
S	IN-SUITE ERV MASTER SWITCH
S	FAN SWITCH / IN-SUITE ERV OVERRIDE BUTTON
CO	CO SENSOR
G	GAS LINE
G	GAS METER
	GAS COCK
	PRESSURE REDUCING VALVE
	SANITARY ABOVE GRADE
	SANITARY BELOW GRADE
	STORM ABOVE GRADE
	STORM BELOW GRADE
	DOMESTIC COLD WATER
	DOMESTIC HOT WATER
	DOMESTIC HOT WATER RECIRCULATION
	SANITARY VENT
	WATER METER
FD	FLOOR DRAIN
FFD	FUNNEL FLOOR DRAIN
HD	HUB DRAIN
RD	ROOF DRAIN
SLD	SLAB DRAIN
AD	AREA DRAIN
BLAD	BI-LEVEL AREA DRAIN
CB	CATCH BASIN
	SANITARY TRAP
	ELBOW UP
	ELBOW DOWN
CO	WALL CLEANOUT
CO	FLOOR CLEANOUT
HB	HOSE BIBB
NFHB	NON-FREEZE HOSE BIBB
	GLOBE VALVE
	GATE VALVE
	BALL VALVE
	BUTTERFLY VALVE
	PRESSURE REDUCING VALVE
	CHECK VALVE
	CAP
	COMPRESSED AIR OUTLET
N	BACKFLOW PREVENTER
	CIRCUIT BALANCING VALVE
	MULTIPLE PIPES / / - DENOTES NO. OF PIPES
T	TEMPERATURE SENSOR
T	THERMOMETER
	2-WAY MODULATING VALVE
	3-WAY MODULATING VALVE
	1/2"x4"(D) THERMOWELL C/W 1/2" BUSHING, & 1/2" PLUG
XXX	FLOOR ELEVATION ABOVE LEVEL
XXX	FLOOR ELEVATION THIS LEVEL
XXX	HEADROOM (FLOOR TO U/S HEIGHT)

REV/DIV/TY	I	ISSUED FOR ---	E.P.
DATE	NO.	DESCRIPTION	BY

THANK YOU ALL PRINTS DATED PREVIOUS TO FINAL DATE ABOVE

REVISIONS

CONTRACTOR MUST CHECK AND VERIFY ALL DIMENSIONS AND CONDITIONS ON THE JOB AND REPORT ANY ERRORS OR OMISSIONS TO THE ENGINEER PROCEEDING WITH THE WORK. THIS DRAWING IS THE PROPERTY OF THE ENGINEERS AND MUST BE RETURNED UPON COMPLETION OF THE WORK.

DRAWINGS ARE NOT TO BE SCALED

NOVA TREND ENGINEERING
139 West Beaver Creek Road, Unit 31
Richmond Hill, Ontario L4B 3M1
Tel: 905 882-9449
Fax: 905 882-9447
Email: cad@novatrendeng.com

DRAWING TITLE:
P-2 FLOOR PLAN
MECHANICAL LAYOUT

PROJECT TITLE:
ALEXANDRA PARK
XXX
TORONTO ONTARIO

DRAWN BY:	CHECKED BY:	SCALE:
G.S.	E.P.	1:100
DATE: FEB. 13	PROJECT NUMBER: 1313	DRAWING NUMBER: M-3 OF 39

Drawing name: \\CADSERVER\Current Dwg's\1313\1313M - 2ND-P2 PLAN - MECHANICAL LAYOUT.dwg Plotted: Mar 12, 2014 - 3:39pm

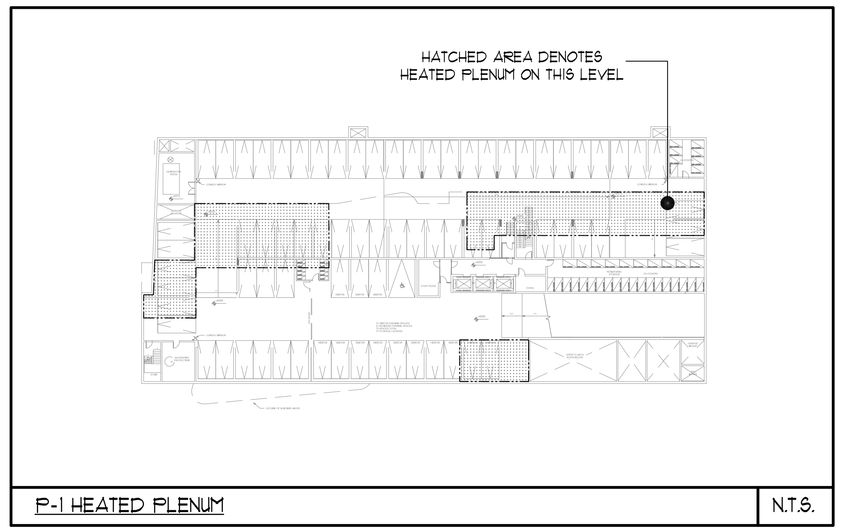

P-1 HEATED PLENUM | N.T.S.

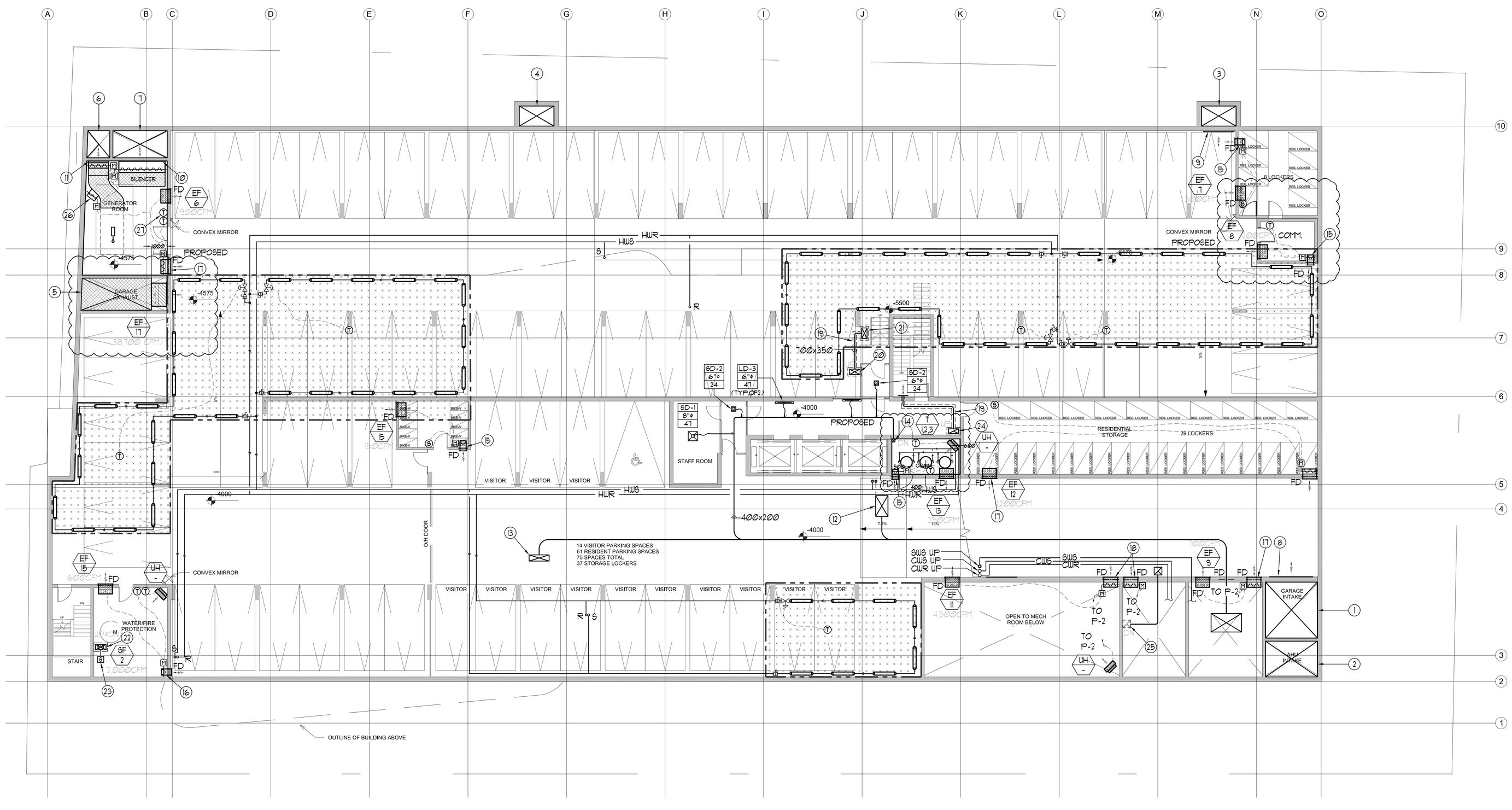

REFER TO DWG. M-X FOR GENERAL AND ACOUSTIC NOTES.

△ 3800 mm CLEAR
FLOOR TO UNDERSLAB

NOTES:

1. 3,300x3,600 (12.26 M², 132 FT²) FRESH AIR INTAKE SHAFT FOR P-1 & P-2 LEVEL.
2. 3,300x2,300 (7.8 M², 84 FT²) FRESH AIR INTAKE SHAFT FOR MAU.
3. 2,250x1,300 (2.93 M², 31.5 FT²) FRESH AIR INTAKE SHAFT FOR P-1 LEVEL.
4. 2,250x1,300 (2.93 M², 31.5 FT²) FRESH AIR INTAKE SHAFT FOR P-2 LEVEL.
5. 5,500x2,000 (11.61 M², 125 FT²) EXHAUST AIR SHAFT FOR P-1 & P-2 LEVEL.
6. 3,500x1,700 (6.2 M², 66.8 FT²) INTAKE AIR SHAFT FOR GENERATOR.
7. 1,400x1,700 (2.5 M², 27.6 FT²) EXHAUST AIR SHAFT FOR GENERATOR.
8. 3,100x2,900 WEATHERPROOF INTAKE LOUVRE C/W BIRDSCREEN. (75,000 CFM)
9. 2,000x2,500 WEATHERPROOF INTAKE LOUVRE C/W BIRDSCREEN. (13,700 CFM)
10. 3,400x2,500 WEATHERPROOF INTAKE LOUVRE C/W MOTORIZED DAMPER AND WIRE MESH. (24,100 CFM)
11. 1,300x3,200 WEATHERPROOF EXHAUST LOUVRE C/W MOTORIZED DAMPER AND WIRE MESH. (23,000 CFM)
12. 1,350x800 F/A DUCT UP C/W FIRE DAMPER AT SLAB.
13. 1,300x400 F/A DUCT UP C/W FIRE DAMPER AT SLAB.
14. 200x200 F/A DUCT DOWN C/W FIRE DAMPER AT SLAB.
15. 400x200 INTAKE LOUVRE C/W MOTORIZED DAMPER, FIRE DAMPER & WIRE MESH.
16. 400x400 INTAKE LOUVRE C/W MOTORIZED DAMPER, FIRE DAMPER & WIRE MESH.
17. 800x400 INTAKE LOUVRE C/W MOTORIZED DAMPER, FIRE DAMPER & WIRE MESH.
18. 1,200x800 400x400 INTAKE LOUVRE C/W MOTORIZED DAMPER, FIRE DAMPER & WIRE MESH.
19. DUCT INSIDE 2HR FIRE RATED ENCLOSURE. ENCLOSURE BY OTHERS.
20. 700x350 STAIR PRESSURIZATION DUCT FROM ABOVE C/W FIRE RATED ENCLOSURE. FIRE RATED ENCLOSURE BY OTHERS.
21. 700x350 STAIR PRESSURIZATION DUCT DOWN C/W FIRE RATED ENCLOSURE. RIRE RATED ENCLOSURE BY OTHERS.
22. 700x350 STAIR PRESSURIZATION DUCT FROM ABOVE & DOWN C/W FIRE RATED ENCLOSURE. FIRE RATED ENCLOSURE BY OTHERS. MOUNT SF-2 VERTICALLY.
23. SMOKE DETECTOR BY DIV.16 TO BE INSTALLED AT THE DISCHARGE SIDE OF THE FAN.
24. 700x350 STAIR RELIEF DUCT UP C/W FIRE RATED ENCLOSURE. FIRE RATED ENCLOSURE BY OTHERS.
25. ---x--- DUCT DOWN TO P-2 LEVEL.
26. ---x--- BY PASS MOTORIZED DAMPER CONNECTS TO THE TEMPERATURE CONTROLLER.
27. TEMPERATURE CONTROLLER TO BE INTERLOCKED TO GENERATOR INTAKE, RECIRCULATED AND EXHAUST MOTORIZED DAMPERS TO MAINTAIN ROOM TEMPERATURE @70 DEGREES F.

LEGEND MECHANICAL

SYMBOL	DESCRIPTION
	SUPPLY AIR DIFFUSER
	SUPPLY AIR TROFFER
	LINEAR SUPPLY DIFFUSER
T	THERMOSTAT
S	FAN SWITCH
	RETURN AIR GRILLE
	EXHAUST AIR GRILLE
	SUPPLY DUCT UP
	SUPPLY DUCT DOWN
	RETURN DUCT UP
	RETURN DUCT DOWN
	EXHAUST DUCT UP
	EXHAUST DUCT DOWN
FD	FIRE DAMPER
BD	BALANCING DAMPER
MD	MOTORIZED DAMPER
MFD	MOTORIZED FIRE DAMPER
BDD	BACKDRAFT DAMPER
OBD	OPPOSED BLADE VOLUME CONTROL DAMPER C/W LOCKING QUADRANT
	TURNING VANES
	FLEXIBLE CONNECTION
	ACOUSTIC INSULATION
	TYPE OF EQUIPMENT / EQUIPMENT IDENTIFICATION
	TYPE OF DIFFUSER OR GRILLE / GRILLE SIZE OR DIFFUSER NECK SIZE / AIRFLOW (CFM) OR L/S
	STARTER (3 PHASE , 1 PHASE)
S	IN-SUITE ERV MASTER SWITCH
S	FAN SWITCH / IN-SUITE ERV OVERRIDE BUTTON
CO	CO SENSOR
G	GAS LINE
G	GAS METER
G	GAS COCK
PR	PRESSURE REDUCING VALVE
	SANITARY ABOVE GRADE
	SANITARY BELOW GRADE
	STORM ABOVE GRADE
	STORM BELOW GRADE
	DOMESTIC COLD WATER
	DOMESTIC HOT WATER
	DOMESTIC HOT WATER RECIRCULATION
	SANITARY VENT
	WATER METER
FD	FLOOR DRAIN
FFD	FUNNEL FLOOR DRAIN
HD	HUB DRAIN
RD	ROOF DRAIN
BLD	SLAB DRAIN
AD	AREA DRAIN
BLAD	BI-LEVEL AREA DRAIN
CB	CATCH BASIN
	SANITARY TRAP
	ELBOW UP
	ELBOW DOWN
CO	WALL CLEANOUT
CO	FLOOR CLEANOUT
HB	HOSE BIBB
NFHB	NON-FREEZE HOSE BIBB
	GLOBE VALVE
	GATE VALVE
	BALL VALVE
	BUTTERFLY VALVE
	PRESSURE REDUCING VALVE
	CHECK VALVE
	CAP
	COMPRESSED AIR OUTLET
	BACKFLOW PREVENTER
	CIRCUIT BALANCING VALVE
	MULTIPLE PIPES / - DENOTES NO. OF PIPES
	TEMPERATURE SENSOR
	THERMOMETER
	2-WAY MODULATING VALVE
	3-WAY MODULATING VALVE
	1/2"x4"(T) THERMOWELL C/W 1/2" BUSHING & 1/2" PLUG
	FLOOR ELEVATION ABOVE LEVEL
	FLOOR ELEVATION TWO LEVEL
	HEADROOM (FLOOR TO U/S HEIGHT)

PRIORITY	1	ISSUED FOR ---	E.P.
DATE	NO.	DESCRIPTION	BY

MARK VOID ALL PRINTS DATED PREVIOUS TO FINAL DATE ABOVE

REVISIONS

CONTRACTOR MUST CHECK AND VERIFY ALL DIMENSIONS AND CONDITIONS ON THE JOB AND REPORT DISCREPANCIES TO THE ENGINEERS BEFORE COMMENCING WORK. DRAWINGS NOT TO BE SCALED. DRAWINGS TO BE RETURNED TO ENGINEERS AND MUST BE RETURNED UPON COMPLETION OF THE WORK.

DRAWINGS ARE NOT TO BE SCALED

NOVA TREND ENGINEERING GROUP LTD.
113 West Beaver Creek Road, Unit 31
Richmond Hill, Ontario L4B 3M1
Tel: 905 882-9445
Fax: 905 882-9441
Email: cad@novatrendeng.com

DRAWING TITLE
P-1 FLOOR PLAN
HVAC LAYOUT

PROJECT TITLE
ALEXANDRA PARK
XXX
TORONTO ONTARIO

DRAWN BY:	CHECKED BY:	SCALE:
G.S.	E.P.	1:100
DATE: FEB. 13	PROJECT NUMBER: 1313	DRAWING NUMBER: M-4 OF 99

Drawing name: \\CADSERVER\Current Dwg\1313\1313- Alexandra Park\2015\1313M- KP-1 PLAN - HVAC LAYOUT.dwg Plotted: Mar 12, 2014 - 3:39pm

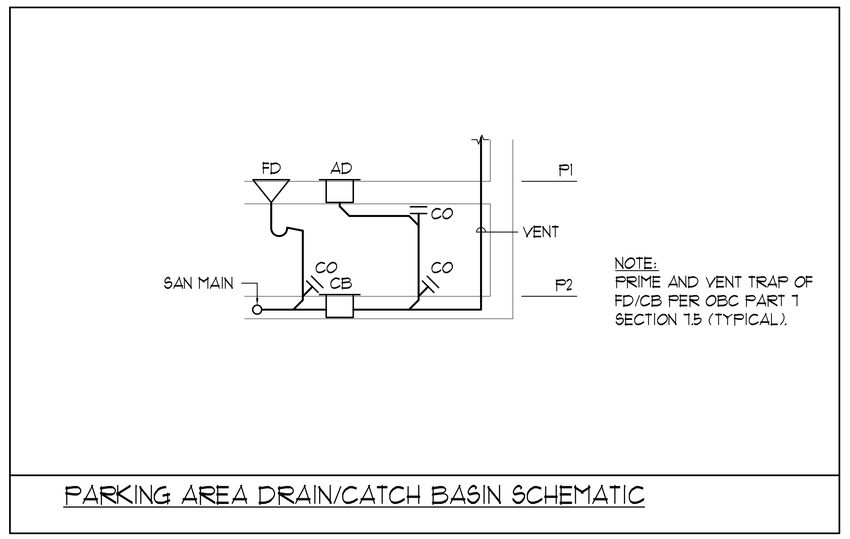

NOTE:
PRIME AND VENT TRAP OF FD/CB PER OBC PART 7 SECTION 7.5 (TYPICAL).

PARKING AREA DRAIN/CATCH BASIN SCHEMATIC

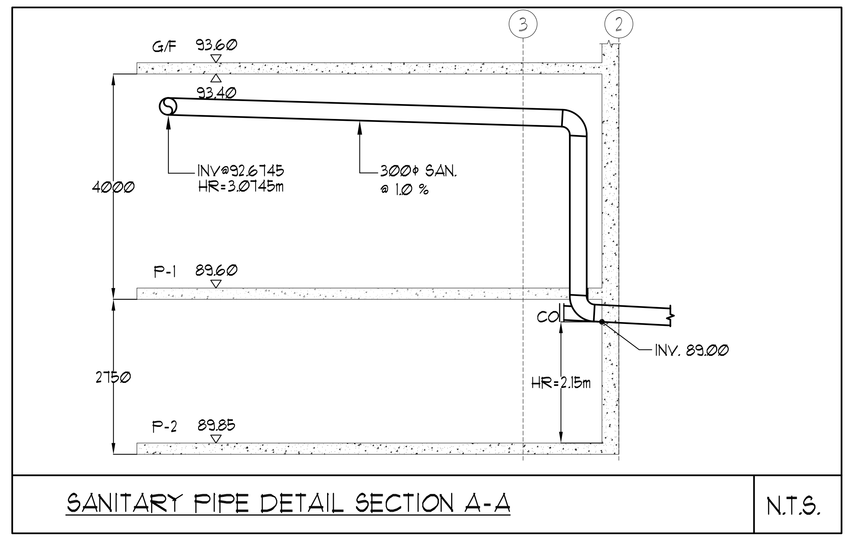

SANITARY PIPE DETAIL SECTION A-A

N.T.S.

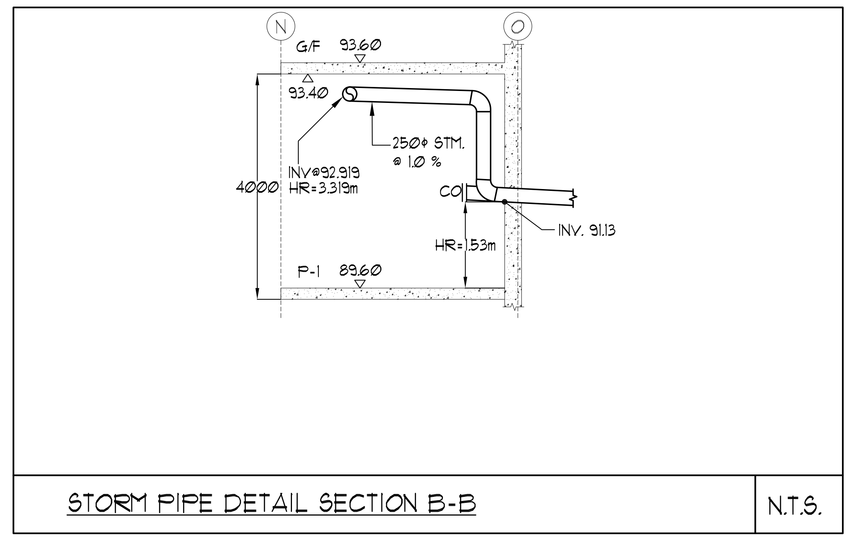

STORM PIPE DETAIL SECTION B-B

N.T.S.

REFER TO DWG. M-X FOR GENERAL AND ACOUSTIC NOTES

-mm CLEAR
FLOOR TO UNDERSLAB

KEYNOTES:

1. 150ø FIRE LINE CONNECTION FROM SITE SERVICE. SEE SPRINKLER DRAWING FOR CONTINUATION.
2. 100ø DCW MAIN CONNECTION FROM SITE SERVICE.
3. 300ø SAN LEAVING PIPE @ 2% AT INV. 89.00.
4. XXXø MANHOLE BY OTHERS.
5. 250ø STORM LEAVING PIPE @ 2% AT INV. 91.13
6. 100ø DCW (LZ) & 100ø DCW (HZ) UP TO G/F.
7. 100ø DCW (LZ) FROM ABOVE.
8. 63ø DHW (LZ) UP TO G/F.
9. 50ø DHWR (LZ) FROM ABOVE.

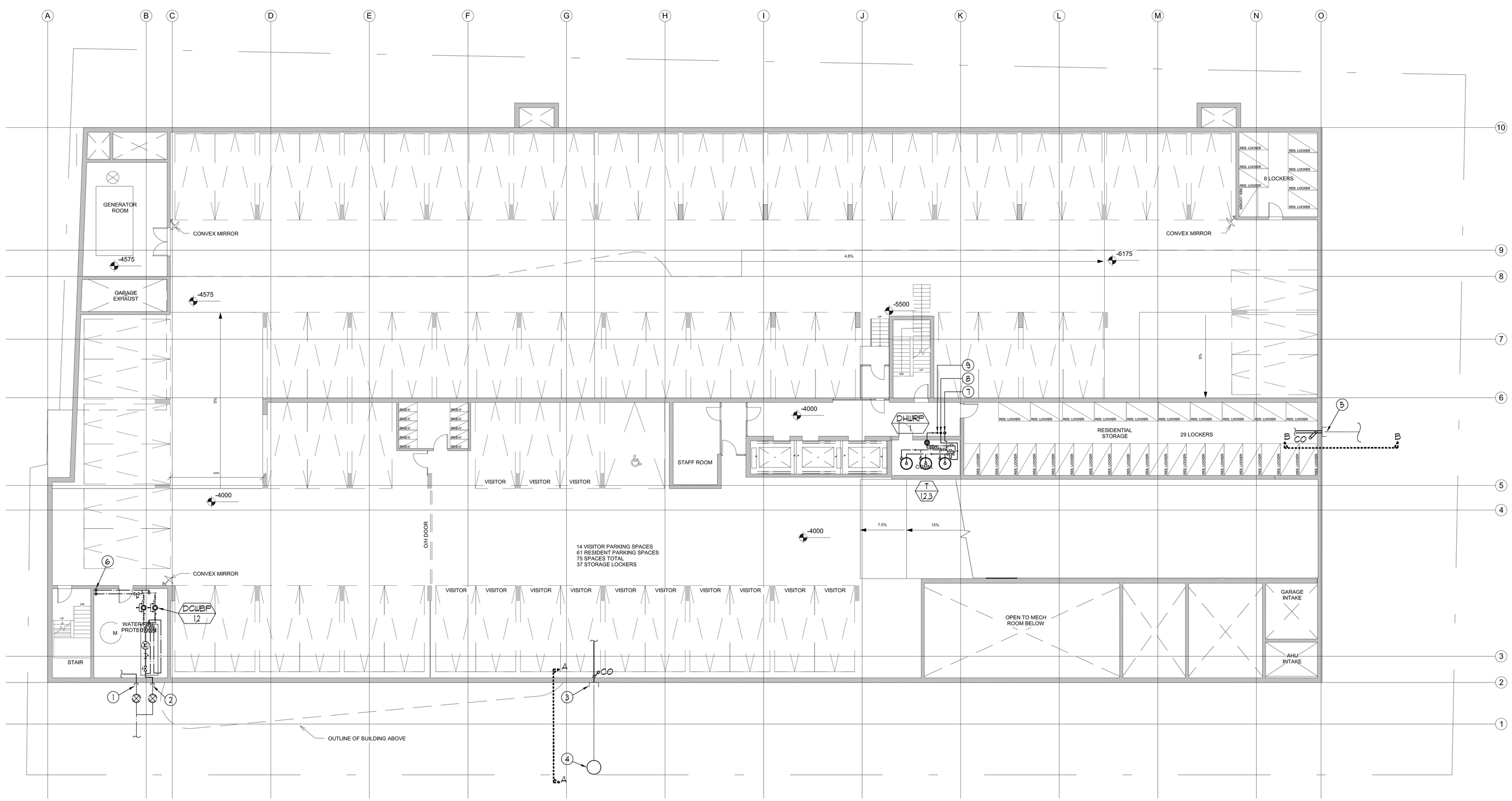

LEGEND
MECHANICAL

SYMBOL	DESCRIPTION
	SUPPLY AIR DIFFUSER
	SUPPLY AIR TROFFER
	LINEAR SUPPLY DIFFUSER
T	THERMOSTAT
S	FAN SWITCH
	RETURN AIR GRILLE
	EXHAUST AIR GRILLE
	SUPPLY DUCT UP
	SUPPLY DUCT DOWN
	RETURN DUCT UP
	RETURN DUCT DOWN
	EXHAUST DUCT UP
	EXHAUST DUCT DOWN
FD	FIRE DAMPER
BD	BALANCING DAMPER
MD	MOTORIZED DAMPER
MFD	MOTORIZED FIRE DAMPER
BDD	BACKDRAFT DAMPER
OBD	OPPOSED BLADE VOLUME CONTROL DAMPER C/U LOCKING QUADRANT
	TURNING VANES
	FLEXIBLE CONNECTION
	ACOUSTIC INSULATION
	TYPE OF EQUIPMENT / EQUIPMENT IDENTIFICATION
	TYPE OF DIFFUSER OR GRILLE / GRILLE SIZE OR DIFFUSER NECK SIZE / AIRFLOW (CFM) OR L/S
	STARTER (3 PHASE , 1 PHASE)
S	N-SITE ERV MASTER SWITCH
S	FAN SWITCH / N-SITE ERV OVERRIDE BUTTON
CO	CO SENSOR
G	GAS LINE
G	GAS METER
G	GAS COCK
	PRESSURE REDUCING VALVE
	SANITARY ABOVE GRADE
	SANITARY BELOW GRADE
	STORM ABOVE GRADE
	STORM BELOW GRADE
	DOMESTIC COLD WATER
	DOMESTIC HOT WATER
	DOMESTIC HOT WATER RECIRCULATION
	SANITARY VENT
W	WATER METER
FD	FLOOR DRAIN
FFD	FUNNEL FLOOR DRAIN
HD	HUB DRAIN
RD	ROOF DRAIN
SLD	SLAB DRAIN
AD	AREA DRAIN
BL.AD	BI-LEVEL AREA DRAIN
CB	CATCH BASIN
	SANITARY TRAP
	ELBOW UP
	ELBOW DOWN
CO	WALL CLEANOUT
CO	FLOOR CLEANOUT
HB	HOSE BIBB
NFHB	NON-FREEZE HOSE BIBB
	GLOBE VALVE
	GATE VALVE
	BALL VALVE
	BUTTERFLY VALVE
	PRESSURE REDUCING VALVE
	CHECK VALVE
	CAP
	COMPRESSED AIR OUTLET
	BACKFLOW PREVENTER
	CIRCUIT BALANCING VALVE
	MULTIPLE PIPES / / - DENOTES NO. OF PIPES
T	TEMPERATURE SENSOR
T	THERMOMETER
	2-WAY MODULATING VALVE
	3-WAY MODULATING VALVE
	1/2"x4 1/2" THERMOWELL C/U 1/2" BUSHING + 1/2" PLUG
XXXX	FLOOR ELEVATION ABOVE LEVEL
XXXX	FLOOR ELEVATION THIS LEVEL
XXXX	HEADROOM (FLOOR TO U/S HEIGHT)

DATE	NO.	DESCRIPTION	BY
YYYY/MM/DD	1	ISSUED FOR ---	E.P.

MARK VOID ALL PRINTS DATED PREVIOUS TO FINAL DATE ABOVE

REVISIONS

CONTRACTOR MUST CHECK AND VERIFY ALL DIMENSIONS AND CONDITIONS ON THE JOB AND REPORT DISCREPANCIES TO THE ENGINEERS BEFORE PROCEEDING WITH THE WORK. THIS DRAWING IS THE PROPERTY OF THE ENGINEERS AND MUST BE RETURNED UPON COMPLETION OF THE WORK.

DRAWINGS ARE NOT TO BE SCALED

NOVA TREND ENGINEERING GROUP LTD.

178 West Beaver Creek Road, Unit 31
Richmond Hill, Ontario L4B 3M1
Tel: 905 882-5445
Fax: 905 882-5447
Email: cad@novatrendeng.com

DRAWING TITLE:
P-1 FLOOR PLAN
P4D LAYOUT

PROJECT TITLE:
ALEXANDRA PARK

XXX
TORONTO ONTARIO

DRAWN BY:	CHECKED BY:	SCALE:
G.S.	E.P.	1:100
DATE: FEB. 13	PROJECT NUMBER: 1313	DRAWING NUMBER: M-5 OF 99

Drawing name: \\CADSERVER\Current Dwg\13\1313 - Alexandra Park\2d\1313M- 5(P-1 PLAN - P4D LAYOUT).dwg Plotted: Mar 12, 2014 - 3:39pm

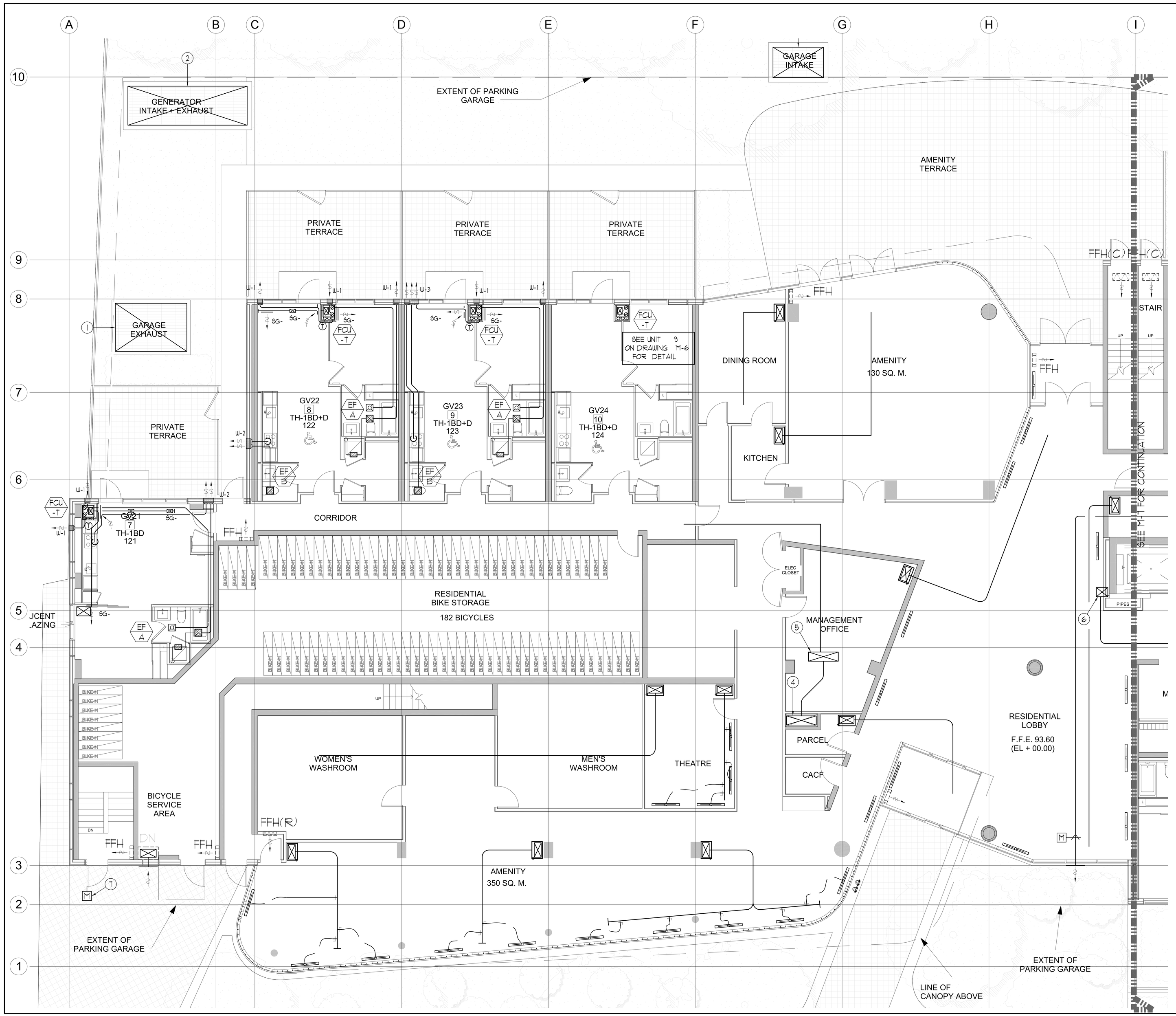

GENERAL NOTES:

1) CONTRACTOR SHALL CO-ORDINATE ARCHITECTURAL, STRUCTURAL, LIGHTING, HVAC, SPRINKLER DRAWINGS TO AVOID AREAS OF CONFLICT AND TO MAINTAIN CEILING HEIGHTS.

2) CONTRACTOR SHALL REPORT ALL DISCREPANCIES AND AREA OF CONFLICTS TO THE ENGINEER PRIOR TO WORK BEGINS.

3) PROVIDE EXPANSION CHAMBERS FOR ALL KITCHEN SINKS.

4) SEE INSTALLATION DETAILS DRAWING FOR WASHER DOM. H&C WATER, SANITARY CONNECTION DETAILS.

5) SUPPLY AND INSTALL COMPLETE DOMESTIC HOT AND COLD WATER LINES, SANITARY AND VENT LINES TO EACH FIXTURE /EQUIPMENT INCLUDING WATER CLOSETS, LAVATORIES, BATHS, SHOWERS, KITCHEN SINK, WASHING MACHINES, DISHWASHERS, AND FLOOR DRAINS, KITCHEN SINK, LAVATORIES, WATER CLOSETS AND WASHING MACHINE TO BE C/W LOCALIZED SHUT-OFF VALVES.

6) ALL VENT PIPE INSTALLATION TO COMPLY WITH PLUMBING CODES.

7) FOR D.H.&C. W. RISER SIZES, REFER TO RISER DIAGRAM

8) FIRE DAMPERS ARE REQUIRED TO BE LISTED AND ARE TO HAVE FIRE PROTECTION RATING OF THE PENETRATED FIRE SEPARATION.

9) THE PIPING PENETRATING THE VARIOUS FIRE SEPARATION IS REQUIRED TO BE FIRESTOPPED WITH A LISTED FIRESTOPPING MATERIAL IN ACCORDANCE WITH OBC ARTICLE 3.1.9.1

10) THE FIRE HOSE CABINET THAT ARE RECESSED INTO THE EXIT STAIR SHAFTS ARE REQUIRED TO BE SEPARATED FROM THE EXIT STAIR BY A 2 HR. FIRE SEPARATION.

11) NO FLEXIBLE DUCT SHALL BE USED FOR ANY IN-SUITE DUCTWORK.

12) PROVIDE 25MM EXTERNAL INSULATION TO ENTIRE FRESH AIR DUCT FROM EXTERIOR WALL TO ERV FAN COIL UNIT.

13) DRYER EXHAUST DUCT SHALL BE SMOOTH AND CORROSION-RESISTANT MATERIAL (FLEXIBLE CONNECTION IS NOT ACCEPTABLE).

REFER TO DWG. M-X FOR ACOUSTIC NOTES

FLOOR TO UNDERSLAB ∆ -mm CLEAR
CEILING HEIGHT = 4200 mm
AMENITY & LOBBY CEILING HEIGHT = 3350 mm
AMENITY & LOBBY TRANSFER SLAB 850mm

NOTES:

1. 3,100x2,000 (6.2 M², 68 FT²) EXHAUST AIR SHAFT FOR P-1 & P-2 LEVEL C/W GRATE BY OTHERS.
2. 5,200x1,700 (8.84 M², 95 FT²) AIR SHAFT FOR GENERATOR INTAKE & EXHAUST C/W GRATE BY OTHERS.
3. 2,250x1,300 (2.93 M², 31.5 FT²) FRESH AIR INTAKE SHAFT FOR P-2 LEVEL C/W GRATE BY OTHERS.
4. 1,300x400 F/A DUCT FROM BELOW C/W FIRE DAMPER AT SLAB.
5. 1,300x400 F/A DUCT UP TO SOUTH SHAFT A C/A FIRE DAMPER AT SLAB.
6. 500x400 F/A DUCT UP TO SOUTH SHAFT B C/W FIRE DAMPER AT SLAB.
7. MOTORIZED DOOR TO BE CONNECTED TO FIRE ALARM SYSTEM BY DIV.16.

LEGEND
MECHANICAL

SYMBOL	DESCRIPTION
	SUPPLY AIR DIFFUSER
	SUPPLY AIR TROFFER
	LINEAR SUPPLY DIFFUSER
T	THERMOSTAT
S	FAN SWITCH
	RETURN AIR GRILLE
	EXHAUST AIR GRILLE
	SUPPLY DUCT UP
	SUPPLY DUCT DOWN
	RETURN DUCT UP
	RETURN DUCT DOWN
	EXHAUST DUCT UP
	EXHAUST DUCT DOWN
FD	FIRE DAMPER
BD	BALANCING DAMPER
MD	MOTORIZED DAMPER
MFD	MOTORIZED FIRE DAMPER
BDD	BACKDRAFT DAMPER
OBD	OPPOSED BLADE VOLUME CONTROL DAMPER C/W LOCKING QUADRANT
	TURNING VANES
	FLEXIBLE CONNECTION
	ACOUSTIC INSULATION
XX	TYPE OF EQUIPMENT
XX	EQUIPMENT IDENTIFICATION
XXX/XXX	TYPE OF DIFFUSER OR GRILLE
XXX	GRILLE SIZE OR DIFFUSER NECK SIZE
XXX	AIRFLOW (CFM) OR L/S
	STARTER / 3 PHASE / PHASE /
S	IN-SUITE ERV MASTER SWITCH
S	FAN SWITCH / IN-SUITE ERV OVERRIDE BUTTON
CO	CO SENSOR
G	GAS LINE
G	GAS METER
G	GAS COCK
PR	PRESSURE REDUCING VALVE
	SANITARY ABOVE GRADE
	SANITARY BELOW GRADE
	STORM ABOVE GRADE
	STORM BELOW GRADE
	DOMESTIC COLD WATER
	DOMESTIC HOT WATER
	DOMESTIC HOT WATER RECIRCULATION
	SANITARY VENT
	WATER METER
FD	FLOOR DRAIN
FFD	FUNNEL FLOOR DRAIN
HD	HUB DRAIN
RD	ROOF DRAIN
BLD	SLAB DRAIN
AD	AREA DRAIN
BLAD	BI-LEVEL AREA DRAIN
CB	CATCH BASIN
	SANITARY TRAP
	ELBOW UP
	ELBOW DOWN
CO	WALL CLEANOUT
CO	FLOOR CLEANOUT
HB	HOSE BIBB
NFHB	NON-FREEZE HOSE BIBB
	GLOBE VALVE
	GATE VALVE
	BALL VALVE
	BUTTERFLY VALVE
	PRESSURE REDUCING VALVE
	CHECK VALVE
	CAP
	COMPRESSED AIR OUTLET
NI	BACKFLOW PREVENTER
	CIRCUIT BALANCING VALVE
	MULTIPLE PIPES / - DENOTES NO. OF PIPES
T	TEMPERATURE SENSOR
T	THERMOSTAT
	2-WAY MODULATING VALVE
	3-WAY MODULATING VALVE
	1/2"x4"(2) THERMOWELL C/W 1/2" BUSHING & 1/2" PLUG
XXX	FLOOR ELEVATION ABOVE LEVEL
XXX	FLOOR ELEVATION THIS LEVEL
XXX	HEADROOM (FLOOR TO U/S HEIGHT)

REV/QTY	1	ISSUED FOR ----		E.P.
DATE	NO.	DESCRIPTION		BY

MARK VOID ALL PRINTS DATED PREVIOUS TO FINAL DATE ABOVE

REVISIONS

CONTRACTOR MUST CHECK AND VERIFY ALL DIMENSIONS AND CONDITIONS ON THE JOB AND REPORT DISCREPANCIES TO THE ENGINEERS BEFORE PROCEEDING WITH THE WORK. THIS DRAWING IS THE PROPERTY OF THE ENGINEERS AND MUST BE RETURNED UPON COMPLETION OF THE WORK.

DRAWINGS ARE NOT TO BE SCALED

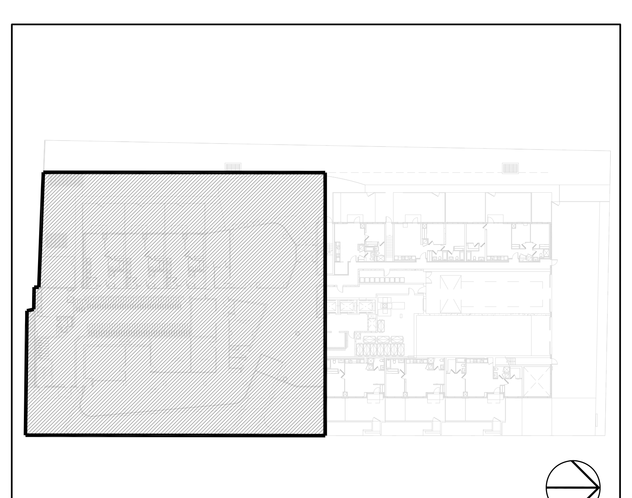

KEY PLAN N.T.S.

NOVA TREND ENGINEERING GROUP LTD.
178 West Beaver Creek Road, Unit 31
Richmond Hill, Ontario L4B 3M1
Tel: 905 882-5445
Fax: 905 882-5447
Email: cad@novatrendeng.com

DRAWING TITLE:
G/F SOUTH
HVAC DUCTWORK LAYOUT

PROJECT TITLE:
ALEXANDRA PARK
XXX
TORONTO ONTARIO

DRAWN BY:	CHECKED BY:	SCALE:
G.S.	E.P.	1:50
DATE: FEB. 13	PROJECT NUMBER: 1313	DRAWING NUMBER: M-6 OF 39

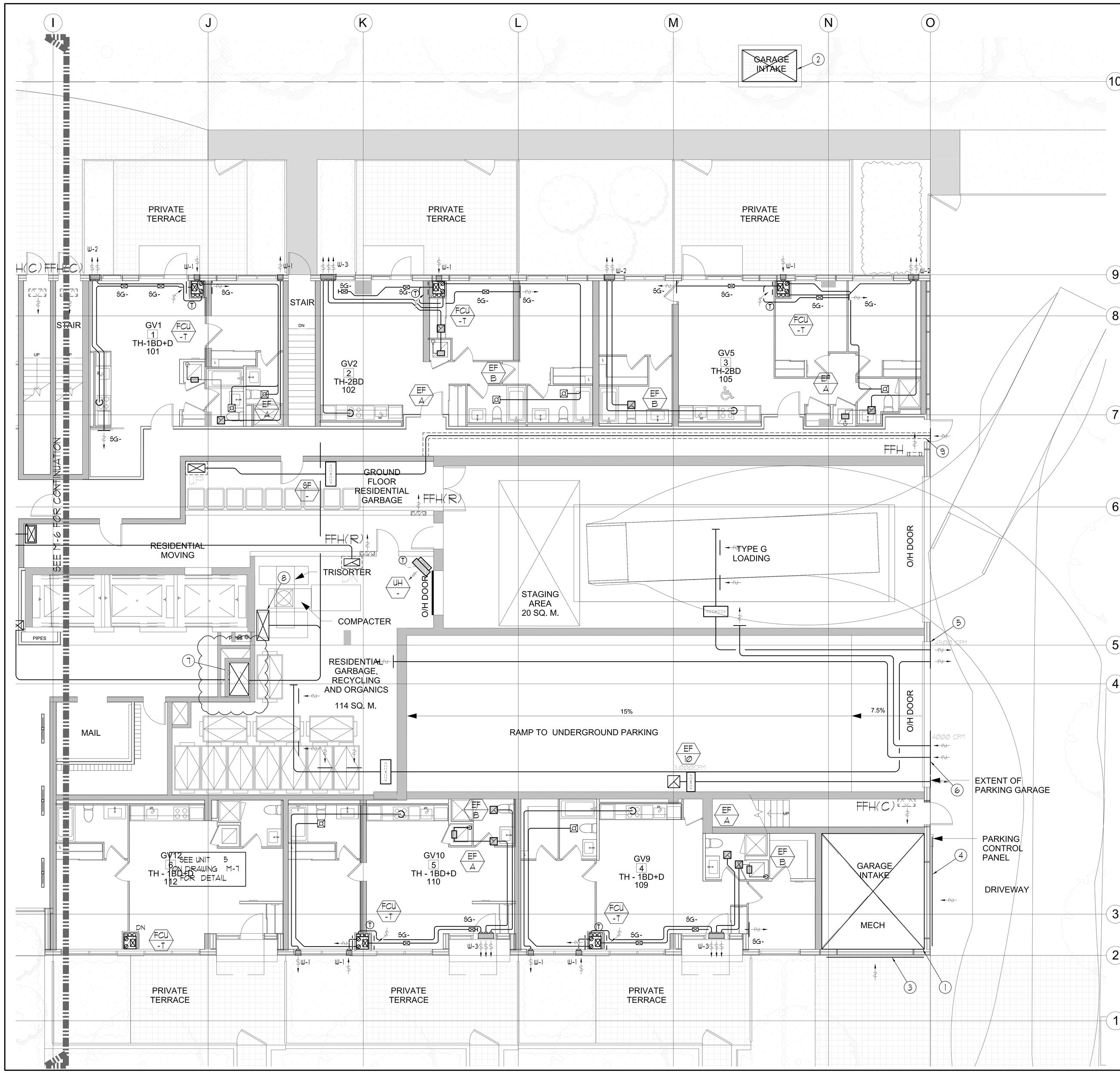

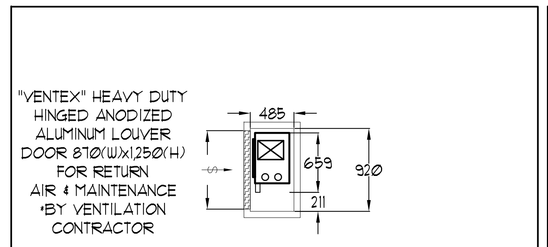

TYPICAL MECH. CLOSET FOR VERTICAL FCU (FCC-1T TO 15T) AT COMMON AREA — N.T.S.

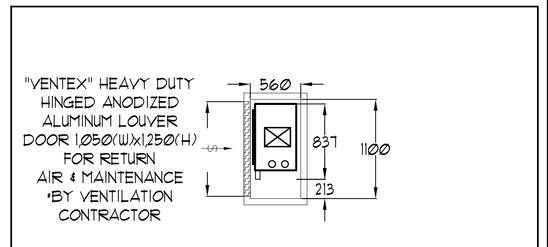

TYPICAL MECH. CLOSET FOR VERTICAL FCU (FCC-2T TO 3T) AT COMMON AREA — N.T.S.

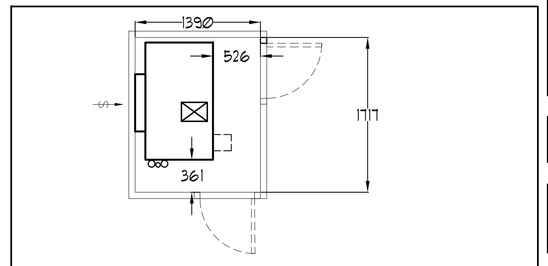

TYPICAL MECH. CLOSET FOR VERTICAL FCU (FCC-5T) AT COMMON AREA — N.T.S.

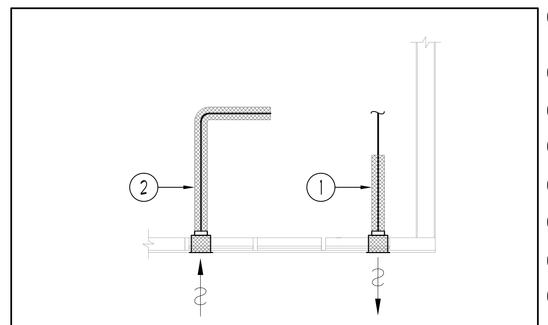

1. EXHAUST DUCTWORK TO BE C/W 1" THICK THERMAL INSULATION 6FT. FROM EXTERNAL WALL. (TYPICAL)
2. F/A INTAKE DUCTWORK TO BE C/W 1" THICK THERMAL INSULATION FOR ENTIRE LENGTH FROM EXTERIOR WALL TO ERV FCU. (TYPICAL)

TYPICAL DETAIL: INSULATION FOR INTAKE/EXHAUST DUCTWORK — NTS

GENERAL NOTES:

1) CONTRACTOR SHALL CO-ORDINATE ARCHITECTURAL, STRUCTURAL, LIGHTING, HVAC, SPRINKLER DRAWINGS TO AVOID AREAS OF CONFLICT AND TO MAINTAIN CEILING HEIGHTS.

2) CONTRACTOR SHALL REPORT ALL DISCREPANCIES AND AREA OF CONFLICTS TO THE ENGINEER PRIOR TO WORK BEGINS.

3) PROVIDE EXPANSION CHAMBERS FOR ALL KITCHEN SINKS.

4) SEE INSTALLATION DETAILS DRAWING FOR WASHER DOM. H+C WATER, SANITARY CONNECTION DETAILS.

5) SUPPLY AND INSTALL COMPLETE DOMESTIC HOT AND COLD WATER LINES, SANITARY AND VENT LINES TO EACH FIXTURE /EQUIPMENT INCLUDING WATER CLOSETS, LAVATORIES, BATHS, SHOWERS, KITCHEN SINK, WASHING MACHINES, DISHWASHERS, AND FLOOR DRAINS. KITCHEN SINK, LAVATORIES, WATER CLOSETS AND WASHING MACHINE TO BE C/W LOCALIZED SHUT-OFF VALVES.

6) ALL VENT PIPE INSTALLATION TO COMPLY WITH PLUMBING CODES.

7) FOR D.H.+C. W. RISER SIZES, REFER TO RISER DIAGRAM

8) FIRE DAMPERS ARE REQUIRED TO BE LISTED AND ARE TO HAVE FIRE PROTECTION RATING OF THE PENETRATED FIRE SEPARATION.

9) THE PIPING PENETRATING THE VARIOUS FIRE SEPARATION IS REQUIRED TO BE FIRESTOPPED WITH A LISTED FIRESTOPPING MATERIAL IN ACCORDANCE WITH OBC ARTICLE 3.1.9.1

10) THE FIRE HOSE CABINET THAT ARE RECESSED INTO THE EXIT STAIR SHAFTS ARE REQUIRED TO BE SEPARATED FROM THE EXIT STAIR BY A 2 HR. FIRE SEPARATION.

11) NO FLEXIBLE DUCT SHALL BE USED FOR ANY IN-SUITE DUCTWORK.

12) PROVIDE 25MM EXTERNAL INSULATION TO ENTIRE FRESH AIR DUCT FROM EXTERIOR WALL TO ERV FAN COIL UNIT.

13) DRYER EXHAUST DUCT SHALL BE SMOOTH AND CORROSION-RESISTANT MATERIAL (FLEXIBLE CONNECTION IS NOT ACCEPTABLE).

REFER TO DWG. M-X FOR ACOUSTIC NOTES

FLOOR TO UNDERSLAB ___ -mm CLEAR
CEILING HEIGHT = 4200 mm
AMENITY & LOBBY CEILING HEIGHT = 3350 mm
AMENITY & LOBBY TRANSFER SLAB 850mm

NOTES:

1. 4200x4,700 (19.7 M², 212.5 FT²) FRESH AIR INTAKE SHAFT FOR F-1 & F-2 LEVEL AND MAU-1.
2. 2,250x1300 (2.93 M², 31.5 FT²) FRESH AIR INTAKE SHAFT FOR F-1 LEVEL C/W GRATE BY OTHERS.
3. 4000x3200 WEATHERPROOF INTAKE LOUVRE C/W BIRDSCREEN. (35,000 CFM)
4. 4500x3200 WEATHERPROOF INTAKE LOUVRE C/W BIRDSCREEN. (40,000 CFM)
5. 2,000x8,00 WEATHERPROOF INTAKE LOUVRE c/w BIRDSCREEN. (4,000 CFM)
6. 1,100x8,00 WEATHERPROOF EXHAUST LOUVRE c/w BIRDSCREEN. (4500 CFM)
7. 650x1300 F/A DUCT FROM BELOW C/W FIRE DAMPER AT SLAB.
8. 1250x500 F/A DUCT UP TO NORTH SHAFT C/W FIRE DAMPER AT SLAB.
9. 2Hr FIRE RATED ENCLOSURE. FIRE RATED ENCLOSURE BY OTHERS.

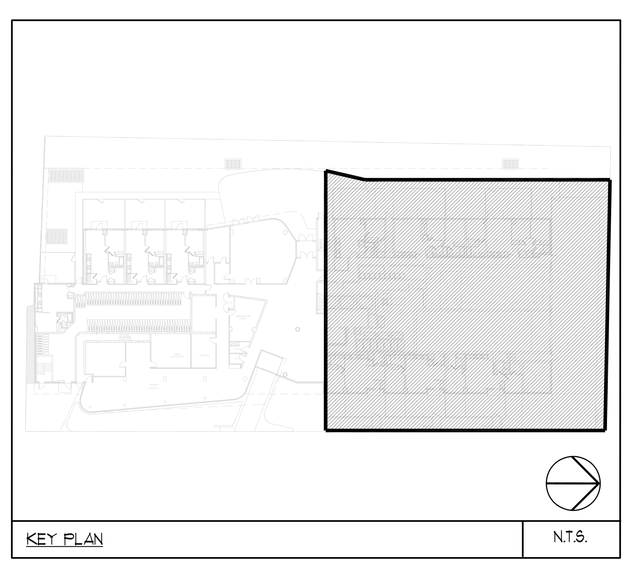

KEY PLAN — N.T.S.

LEGEND
MECHANICAL

SYMBOL	DESCRIPTION
	SUPPLY AIR DIFFUSER
	SUPPLY AIR TROFFER
	LINEAR SUPPLY DIFFUSER
T	THERMOSTAT
S	FAN SWITCH
	RETURN AIR GRILLE
	EXHAUST AIR GRILLE
	SUPPLY DUCT UP
	SUPPLY DUCT DOWN
	RETURN DUCT UP
	RETURN DUCT DOWN
	EXHAUST DUCT UP
	EXHAUST DUCT DOWN
FD	FIRE DAMPER
BD	BALANCING DAMPER
MD	MOTORIZED DAMPER
MFD	MOTORIZED FIRE DAMPER
BDD	BACKDRAFT DAMPER
OBD	OPPOSED BLADE VOLUME CONTROL DAMPER C/W LOCKING QUADRANT
	TURNING VANES
	FLEXIBLE CONNECTION
	ACOUSTIC INSULATION
XXX	TYPE OF EQUIPMENT EQUIPMENT IDENTIFICATION
XXX/XXX	TYPE OF DIFFUSER OR GRILLE GRILLE SIZE OR DIFFUSER NECK SIZE
XXX/XXX	AIRFLOW CFM OR L/S
	STARTER / 3 PHASE / PHASE /
S	IN-SUITE ERV MASTER SWITCH
S	FAN SWITCH / IN-SUITE ERV OVERRIDE BUTTON
CO	CO SENSOR
G	GAS LINE
G	GAS METER
G	GAS COCK
PR	PRESSURE REDUCING VALVE
	SANITARY ABOVE GRADE
	SANITARY BELOW GRADE
	STORM ABOVE GRADE
	STORM BELOW GRADE
	DOMESTIC COLD WATER
	DOMESTIC HOT WATER
	DOMESTIC HOT WATER RECIRCULATION
	SANITARY VENT
	WATER METER
FD	FLOOR DRAIN
FFD	FUNNEL FLOOR DRAIN
HD	HUB DRAIN
RD	ROOF DRAIN
BLD	BLAB DRAIN
AD	AREA DRAIN
BLAD	BI-LEVEL AREA DRAIN
CB	CATCH BASIN
	SANITARY TRAP
	ELBOW UP
	ELBOW DOWN
CO	WALL CLEANOUT
CO	FLOOR CLEANOUT
HB	HOSE BIBB
NFHB	NON-FREEZE HOSE BIBB
	GLOBE VALVE
	GATE VALVE
	BALL VALVE
	BUTTERFLY VALVE
	PRESSURE REDUCING VALVE
	CHECK VALVE
	CAP
CA	COMPRESSED AIR OUTLET
BV	BACKFLOW PREVENTER
	CIRCUIT BALANCING VALVE
	MULTIPLE PIPES / - DENOTES NO. OF PIPES
T	TEMPERATURE SENSOR
T	THERMOMETER
	2-WAY MODULATING VALVE
	3-WAY MODULATING VALVE
	1/2"x4"(2) THERMOWELL C/W 1/2" BUSHING & 1/2" PLUG
XXX	FLOOR ELEVATION ABOVE LEVEL
XXX	FLOOR ELEVATION THIS LEVEL
XXX	HEADROOM (FLOOR TO U/S HEIGHT)

TYP/DD/YY		ISSUED FOR ---	E.P.
DATE	NO.	DESCRIPTION	BY

MARK VOID ALL PRINTS DATED PREVIOUS TO FINAL DATE ABOVE

REVISIONS

CONTRACTOR MUST CHECK AND VERIFY ALL DIMENSIONS AND CONDITIONS ON THE JOB AND REPORT DISCREPANCIES TO THE ENGINEERS BEFORE PROCEEDING WITH THE WORK. THIS DRAWING IS THE PROPERTY OF THE ENGINEERS AND MUST BE RETURNED UPON COMPLETION OF THE WORK.

DRAWINGS ARE NOT TO BE SCALED

NOVA TREND ENGINEERING GROUP LTD.
119 West Beaver Creek Road, Unit 31
Richmond Hill, Ontario L4B 3M1
Tel: 905 882-5445
Fax: 905 882-5447
Email: cad@novatrendeng.com

DRAWING TITLE:
G/F NORTH
HVAC DUCTWORK LAYOUT

PROJECT TITLE:
ALEXANDRA PARK
XXX
TORONTO ONTARIO

DRAWN BY:	CHECKED BY:	SCALE:
G.S.	E.P.	1:50
DATE: FEB. 13	PROJECT NUMBER: 1313	DRAWING NUMBER: M-1 OF 35

Drawing name: \\CADSERVER\Current Dwgs\1313\1313-M - 6 -FDP PLAN -SOUTH & NORTH DUCTWORK LAYOUT.dwg Plotted: Mar 12, 2014 - 3:40pm

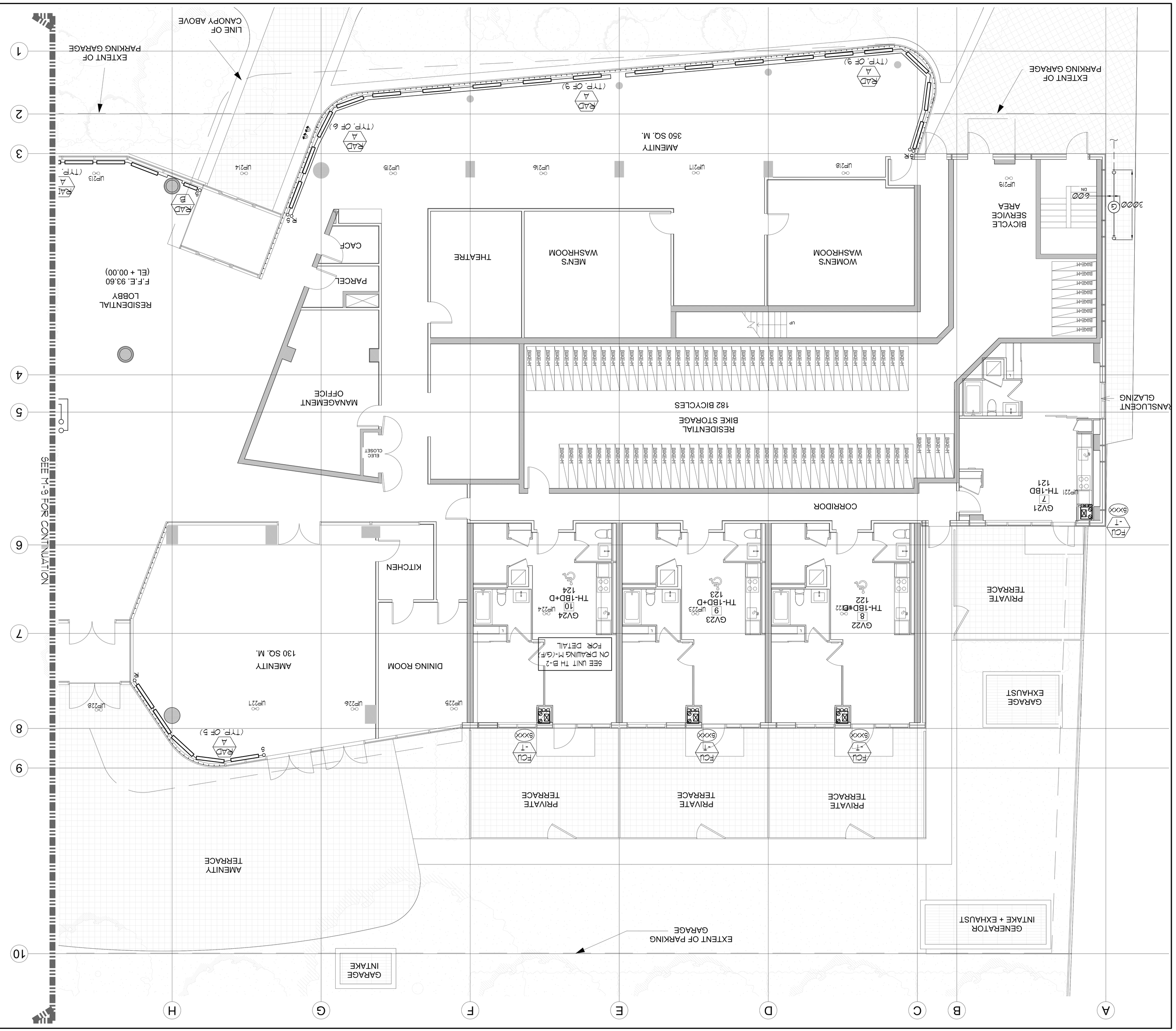
RESIDENTIAL LOBBY
F.F.E. 93.60
(EL + 00.00)
MANAGEMENT OFFICE
ELEC CLOSET
PARCEL
CACF
THEATRE
MEN'S WASHROOM
WOMEN'S WASHROOM
BICYCLE SERVICE AREA
UP21B
AMENITY
350 SQ. M.
RESIDENTIAL BIKE STORAGE
182 BICYCLES
CORRIDOR
GV21
7
TH-1BD
121
UP221
TRANSLUCENT GLAZING
EXTENT OF PARKING GARAGE
LINE OF CANOPY ABOVE
EXTENT OF PARKING GARAGE
SEE M-3 FOR CONTINUATION
PRIVATE TERRACE
PRIVATE TERRACE
PRIVATE TERRACE
GARAGE EXHAUST
GENERATOR INTAKE + EXHAUST
GV22
8
TH-1BD+D
122
GV23
9
TH-1BD+D
123
GV24
10
TH-1BD+D
124
SEE UNIT TH B-2 ON DRAWING M-(G/F) FOR DETAIL
DINING ROOM
KITCHEN
AMENITY
130 SQ. M.
AMENITY TERRACE
GARAGE INTAKE
EXTENT OF PARKING GARAGE
FCU -T
6XXX
READ A (TYP. OF 9)
READ B
READ A (TYP. OF 6)
READ A (TYP. OF 5)
READ A (TYP.)
CAGING BY OTHERS
FINTUBE AND PIPE BY THIS CONTRACTOR
15Ø
25Ø
FEERMEIER RADIATOR DETAIL
NTS
REFER TO DWG M-X FOR GENERAL AND ACOUSTIC NOTES
FLOOR TO UNDERSLAB -mm CLEAR
CEILING HEIGHT = 4200 mm
AMENITY & LOBBY CEILING HEIGHT = 3350 mm
AMENITY & LOBBY TRANSFER SLAB 250mm
NOTES:
1 PIPE SHAFT - REFER TO PIPE RISER DETAIL ON THIS DRAWING FOR DETAILS.
2
3
4
LEGEND
MECHANICAL
SYMBOL DESCRIPTION
SUPPLY AIR DIFFUSER
SUPPLY AIR TERMINAL
RETURN AIR GRILLE
EXHAUST AIR GRILLE
SUPPLY DUCT UP
SUPPLY DUCT DOWN
RETURN DUCT UP
RETURN DUCT DOWN
EXHAUST DUCT UP
EXHAUST DUCT DOWN
BALANCING DAMPER
FIRE DAMPER
FIRE/SMOKE DAMPER
MOTORIZED FIRE DAMPER
MOTORIZED DAMPER
BACKDRAFT DAMPER
OVERSIZED BLADE VOLUME CONTROL DAMPER
CAV LOOKING DAMPER
FLEXIBLE CONNECTION
TURNING VANES
ACOUSTIC INSULATION
EQUIPMENT DESIGNATION
TYPE OF EQUIPMENT
TYPE OF DIFFUSER OR GRILLE
GRILLE SIZE OR DIFFUSER NECK SIZE
GRILLE/DIFF CFM OR L/S
THERMOSTAT, 1 PHASE / PHASE 2
N-SAFE SW-WARM BUTTON
N-SAFE SW-COOL BUTTON
CO SENSOR
FAN BUTTON / N-SAFE SW/ OVERRIDE BUTTON
GAS METER
GAS LINE
GAS COCK
REMOTE REDUCING VALVE
SANITARY ABOVE GRADE
SANITARY BELOW GRADE
STORM ABOVE GRADE
STORM BELOW GRADE
SANITARY VENT
COPPER HOT WATER RECIRCULATION
COPPER COLD WATER
COPPER HOT WATER
FLOOR DRAIN
WATER METER
HUB DRAIN
FLOOR DRAIN
ROOF DRAIN
AREA DRAIN
FLAT ROOF DRAIN
CATCH BASIN
ELBOW UP
SANITARY TEE
ELBOW DOWN
FLOOR CLEANOUT
WALL CLEANOUT
HOSE BIBB
NON-freeze HOSE BIBB
GATE VALVE
GLOBE VALVE
BUTTERFLY VALVE
BALL VALVE
FREEWARE REDUCING VALVE
CHECK VALVE
COPPERWARE AIR OUTLET
BAGNOLD FREEWATER
CAP
CIRCUIT BALANCING VALVE
PULTRIP PIPES
/ - DENOTES NO OR PIPED
TEMPERATURE SENSOR
3-WAY MODULATING VALVE
2-WAY MODULATING VALVE
UV-UV/D/ THERMOBELL
CAV 10" BUSHING x 10" PLUG
FLOOR ELEVATION ABOVE LEVEL
FLOOR ELEVATION NEW LEVEL
HEADROOM (FLOOR TO U/S HEIGHT)
DWG. NO. ALL PARTS LISTED PREVIOUS
REVISIONS
DATE NO. DESCRIPTION BY
MAKE VOID ALL PARTS LISTED PREVIOUS
DRAWING NOT TO BE SCALED
CONTRACTOR MUST CHECK AND VERIFY ALL DIMENSIONS AND CONDITIONS ON THE JOB AND REPORT DISCREPANCIES TO THE ENGINEER BEFORE PROCEEDING WITH THE WORK. THIS DRAWING IS THE PROPERTY OF THE ENGINEER AND MUST BE RETURNED UPON COMPLETION OF THE WORK.
DRAWINGS ARE NOT TO BE SCALED
NOVA
DEVELOPMENTS
INVESTMENT
PROPERTIES
175 Sheldon Drive, Cambridge, Ontario, N1T 1B4
Tel: 519 621-8460
Fax: 519 621-8451
Email: info@novaproperties.com
DRAWING TITLE
G/F SOUTH
HVAC PIPING LAYOUT
PROJECT TITLE
ALEXANDRA PARK
XXX
TORONTO
ONTARIO
DRAWN BY: G.S.
DESIGNED BY: E.P.
SCALE: 1:50
DATE: FEB. 13
PROJECT NUMBER: 13B
DRAWING NUMBER: M-8
Drawing name: V:\CADDRAWS\Alexandra Park\13-13B - 8 GSP Park - South & North HVAC.DWG\M-8\M-8
Plotted: Mar 12, 2014 - 3:46pm

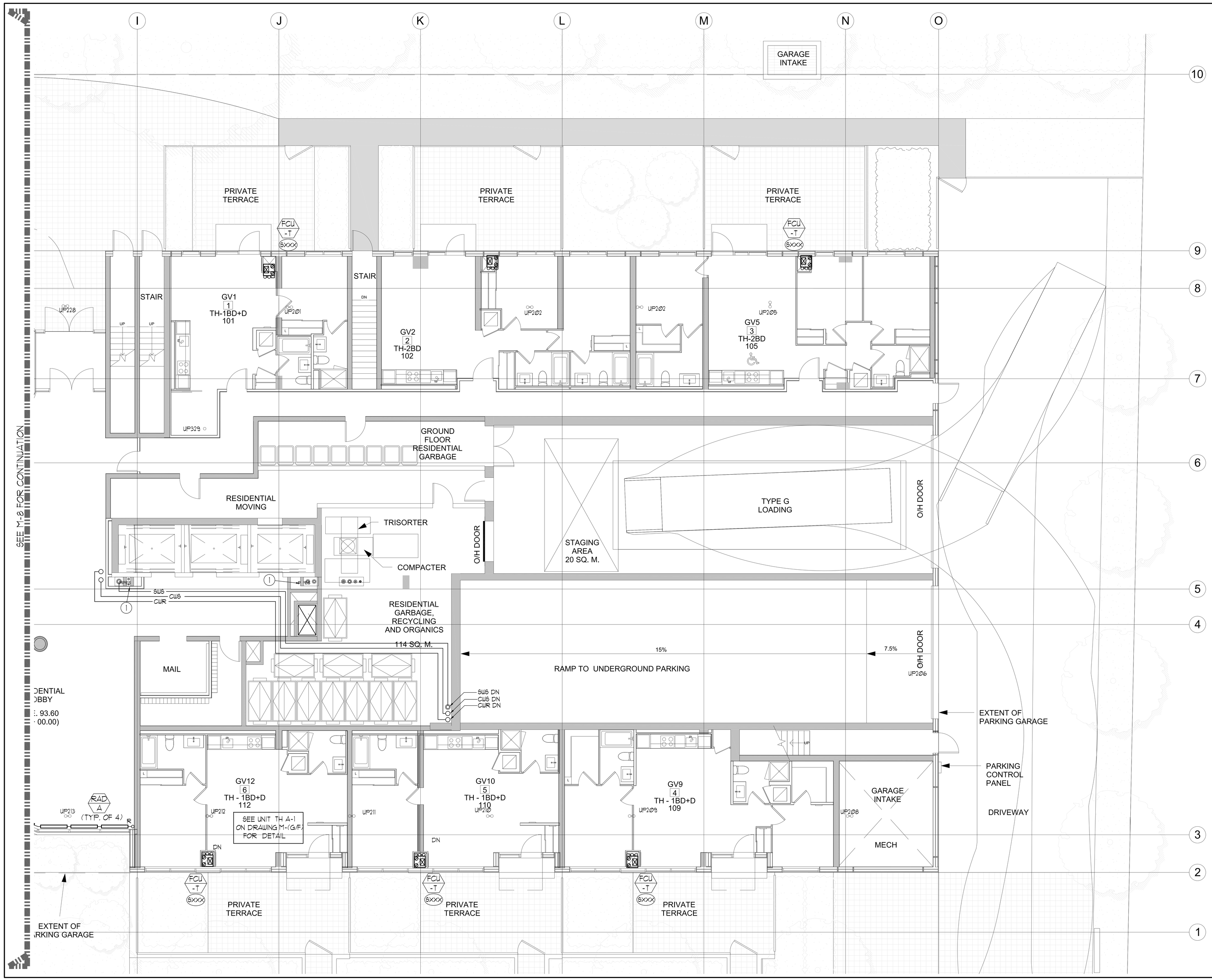

REFER TO DWG. M-X FOR GENERAL AND ACOUSTIC NOTES.

FLOOR TO UNDERSLAB CEILING HEIGHT = 4200 mm
AMENITY & LOBBY CEILING HEIGHT = 3350 mm
AMENITY & LOBBY TRANSFER SLAB 850mm
-mm CLEAR

NOTES:

1. PIPE SHAFT - REFER TO PIPE RISER DETAIL ON THIS DRAWING FOR DETAILS.
2.
3.
4.

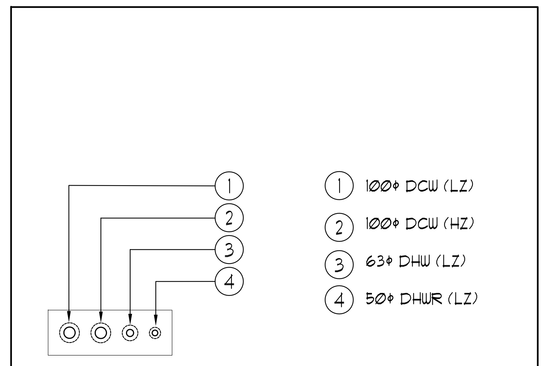

1. 100ø DCW (LZ)
2. 100ø DCW (HZ)
3. 63ø DHW (LZ)
4. 50ø DHWR (LZ)

NORTH PIPE SHAFT 2: G/F. NTS

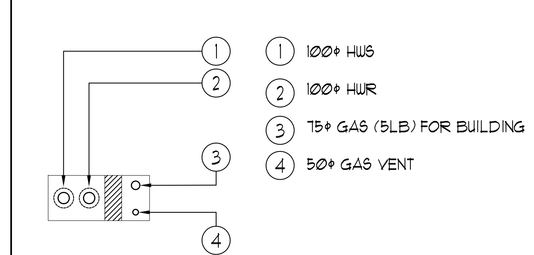

1. 100ø HWS
2. 100ø HWR
3. 75ø GAS (SLB) FOR BUILDING
4. 50ø GAS VENT

NORTH PIPE SHAFT 1: G/F. NTS

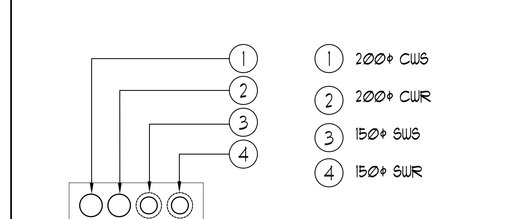

1. 200ø CWS
2. 200ø CWR
3. 150ø SWS
4. 150ø SWR

SOUTH PIPE SHAFT: G/F. NTS

LEGEND MECHANICAL

SYMBOL	DESCRIPTION
	SUPPLY AIR DIFFUSER
	SUPPLY AIR TROFFER
	LINEAR SUPPLY DIFFUSER
T	THERMOSTAT
S	FAN SWITCH
	RETURN AIR GRILLE
	EXHAUST AIR GRILLE
	SUPPLY DUCT UP
	SUPPLY DUCT DOWN
	RETURN DUCT UP
	RETURN DUCT DOWN
	EXHAUST DUCT UP
	EXHAUST DUCT DOWN
FD	FIRE DAMPER
BD	BALANCING DAMPER
MD	MOTORIZED DAMPER
MFD	MOTORIZED FIRE DAMPER
BDD	BACKDRAFT DAMPER
OBD	OPPOSED BLADE VOLUME CONTROL DAMPER C/W LOCKING QUADRANT
	TURNING VANES
	FLEXIBLE CONNECTION
	ACOUSTIC INSULATION
XX	-TYPE OF EQUIPMENT -EQUIPMENT IDENTIFICATION
XX XXX XXX	-TYPE OF DIFFUSER OR GRILLE -GRILLE SIZE OR DIFFUSER NECK SIZE -AIRFLOW CFM OR L/s
XX XX	STARTER (3 PHASE , 1 PHASE)
S	N-SUITE ERV/HRV SWITCH
S	FAN SWITCH / N-SUITE ERV OVERRIDE BUTTON
CO	CO SENSOR
G	GAS LINE
G	GAS METER
G	GAS COCK
PR	PRESSURE REDUCING VALVE
	SANITARY ABOVE GRADE
	SANITARY BELOW GRADE
	STORM ABOVE GRADE
	STORM BELOW GRADE
	DOMESTIC COLD WATER
	DOMESTIC HOT WATER
	DOMESTIC HOT WATER RECIRCULATION
	SANITARY VENT
	WATER METER
FD	FLOOR DRAIN
FFD	FUNNEL FLOOR DRAIN
HD	HUB DRAIN
RD	ROOF DRAIN
SLD	SLAB DRAIN
AD	AREA DRAIN
BLAD	BI-LEVEL AREA DRAIN
CB	CATCH BASIN
	SANITARY TRAP
	ELBOW UP
	ELBOW DOWN
CO	WALL CLEANOUT
CO	FLOOR CLEANOUT
HB	HOSE BIBB
NFHB	NON-FREEZE HOSE BIBB
	GLOBE VALVE
	GATE VALVE
	BALL VALVE
	BUTTERFLY VALVE
	PRESSURE REDUCING VALVE
	CHECK VALVE
	CAP
	COMPRESSED AIR OUTLET
NI	BACKFLOW PREVENTER
	CIRCUIT BALANCING VALVE
	MULTIPLE PIPES / / - DENOTES NO. OF PIPES
T	TEMPERATURE SENSOR
T	THERMOMETER
	2-WAY MODULATING VALVE
	3-WAY MODULATING VALVE
T	12"x4"(D) THERMOWELL C/W 1/2" BUSHING & 1/2" PLUG
XXX	FLOOR ELEVATION ABOVE LEVEL
XXX	FLOOR ELEVATION THIS LEVEL
XXX	HEADROOM (FLOOR TO U/S HEIGHT)

REV/QTY		ISSUED FOR ---		E.P.
DATE	NO.	DESCRIPTION		BY

MARK VOID ALL PRINTS DATED PREVIOUS TO FINAL DATE ABOVE

REVISIONS

CONTRACTOR MUST CHECK AND VERIFY ALL DIMENSIONS AND CONDITIONS ON THE JOB AND REPORT DISCREPANCIES TO THE ENGINEERS BEFORE PROCEEDING WITH THE WORK. THIS DRAWING IS THE PROPERTY OF THE ENGINEERS AND MUST BE RETURNED UPON COMPLETION OF THE WORK.

DRAWINGS ARE NOT TO BE SCALED

NOVA TREND ENGINEERING GROUP INC.
178 West Beaver Creek Road, Unit 31
Richmond Hill, Ontario L4B 3M1
Tel: 905 882-5445
Fax: 905 882-5447
Email: cad@novatrendeng.com

DRAWING TITLE:
G/F NORTH
HVAC PIPING LAYOUT

PROJECT TITLE:
ALEXANDRA PARK
XXX
TORONTO ONTARIO

DRAWN BY:	CHECKED BY:	SCALE:
G.S.	E.P.	1:50
DATE: FEB. 13	PROJECT NUMBER: 1313	DRAWING NUMBER: M-3 OF 35

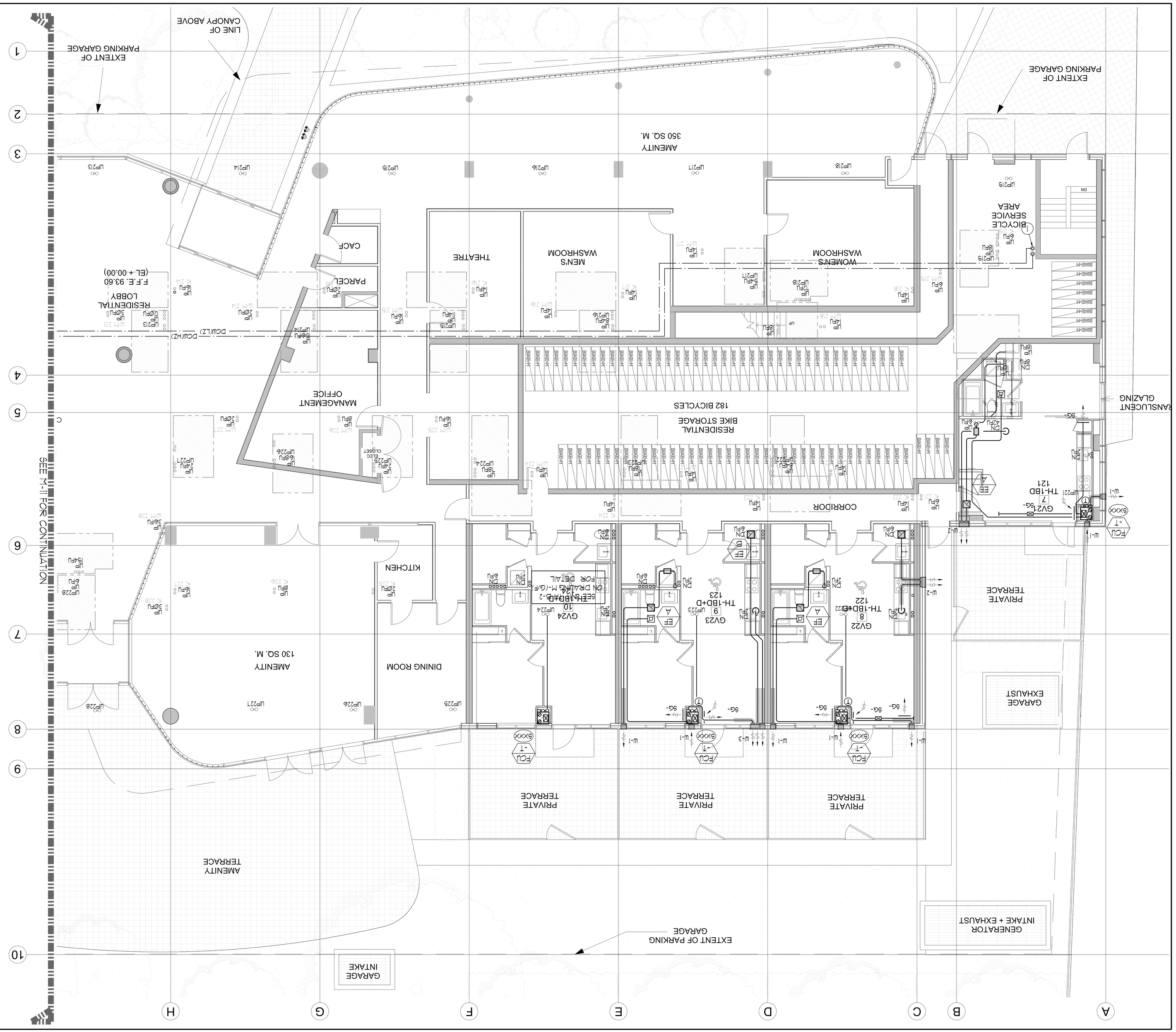

REFER TO DWG. M-X FOR GENERAL AND ACOUSTIC NOTES

FLOOR TO UNDERSIDE △ CEILING HEIGHT = 4200 mm -mm CLEAR
AMENITY = LOBBY CEILING HEIGHT = 3350 mm
AMENITY = LOBBY TRANSFER SLAB 250mm

NOTES:

1. ---> DCW (LZ) & ---> DCW (HZ) FROM BELOW
2.
3.
4.

LEGEND MECHANICAL

SYMBOL	DESCRIPTION
	SUPPLY AIR DIFFUSER
	SUPPLY AIR TRAPDOOR
	EXHAUST AIR DIFFUSER
	EXHAUST AIR GRILLE
	RETURN AIR GRILLE
	SUPPLY DUCT UP
	SUPPLY DUCT DOWN
	RETURN DUCT UP
	RETURN DUCT DOWN
	EXHAUST DUCT UP
	EXHAUST DUCT DOWN
	BALANCING DAMPER
	FIRE DAMPER
	NOTCHED DAMPER
	NOTCHED FIRE DAMPER
	OPPOSED BLADE VOLUME CONTROL DAMPER
	BACKDRAFT DAMPER
	FLEXIBLE CONNECTION
	TURNING VANES
	TYPE OF SUSPENSION
	TYPE OF CEILING OR WALL
	ACOUSTIC INSULATION
	SUSPENDED DEFLECTION
	FIRE DAMPER (1 HOUR / 1 HOUR)
	WALL OR CEILING FIRE RATING
	WALL OR DEMISING FIRE RATING
	CO SENSOR
	GAS LINE
	GAS VALVE
	GAS DOOR
	GAS FILTER
	PRESSURE REDUCING VALVE
	SANITARY ABOVE GRADE
	SANITARY BELOW GRADE
	STORM ABOVE GRADE
	STORM BELOW GRADE
	DOMESTIC HOT WATER
	DOMESTIC COLD WATER
	DOMESTIC HOT WATER RECIRCULATION
	SANITARY VENT
	FLOOR DRAIN
	FLOOR DRAIN
	ROOF DRAIN
	AREA DRAIN
	SUMP PUMP
	SANITARY TRAP
	CLEAN OUT
	ELBOW UP
	ELBOW DOWN
	WALL CLEANOUT
	FLOOR CLEANOUT
	HOSE BIBB
	NON-FREEZE HOSE BIBB
	GLOBE VALVE
	GATE VALVE
	BALL VALVE
	BUTTERFLY VALVE
	PRESSURE REDUCING VALVE
	CHECK VALVE
	BACKFLOW PREVENTER
	COPPERBEDED AIR OUTLET
	BALANCING VALVE
	FULL/PARTIAL PIPES
	DENOTES NO OF PIPES
	TEMPERATURE SENSOR
	THERMOSTAT
	3-WAY MODULATING VALVE
	2-WAY MODULATING VALVE
	10"x10" THERMOSTAT
	CAV 10" BUSHING x 10" PLUG
	FLOOR ELEVATION ABOVE LEVEL
	FLOOR ELEVATION NEW LEVEL
	HEADROOM (FLOOR TO U/S HDWR)

REVISION			
DATE	NO.	DESCRIPTION	BY
		ISSUED FOR ----	EP

REVISIONS

MAKE VOID ALL PREVIOUSLY ISSUED DRAWING DATE ABOVE

CONTRACTORS MUST CHECK AND VERIFY ALL DRAWINGS AND CONFIRM ON THE JOB AND REPORT CONFORMANCE TO THE BUILDING CODE PRIOR TO THE BUILDING & THE PROPERTY OF THE BUILDING AND MUST BE RETURNED UPON COMPLETION OF THE WORK

DRAWINGS ARE NOT TO BE SCALED

NOVA RESIDENTIAL INVESTMENT MANAGEMENT

175 Idwal Beaver Creek Road, Unit 31
Richmond Hill, Ontario L4B 3P1
Tel: 905 882-9446
Fax: 905 882-9447
Email: cadtechnician@novaeng.com

DRAWING TITLE

G/F SOUTH
FLOOR LAYOUT

PROJECT TITLE

ALEXANDRA PARK

DRAWN BY	DESIGNED BY	SCALE
G.S.	E.P.	1:50

XXX
TORONTO ONTARIO

DATE	PROJECT NUMBER	DRAWING NUMBER
FEB. 13	13D	M-10

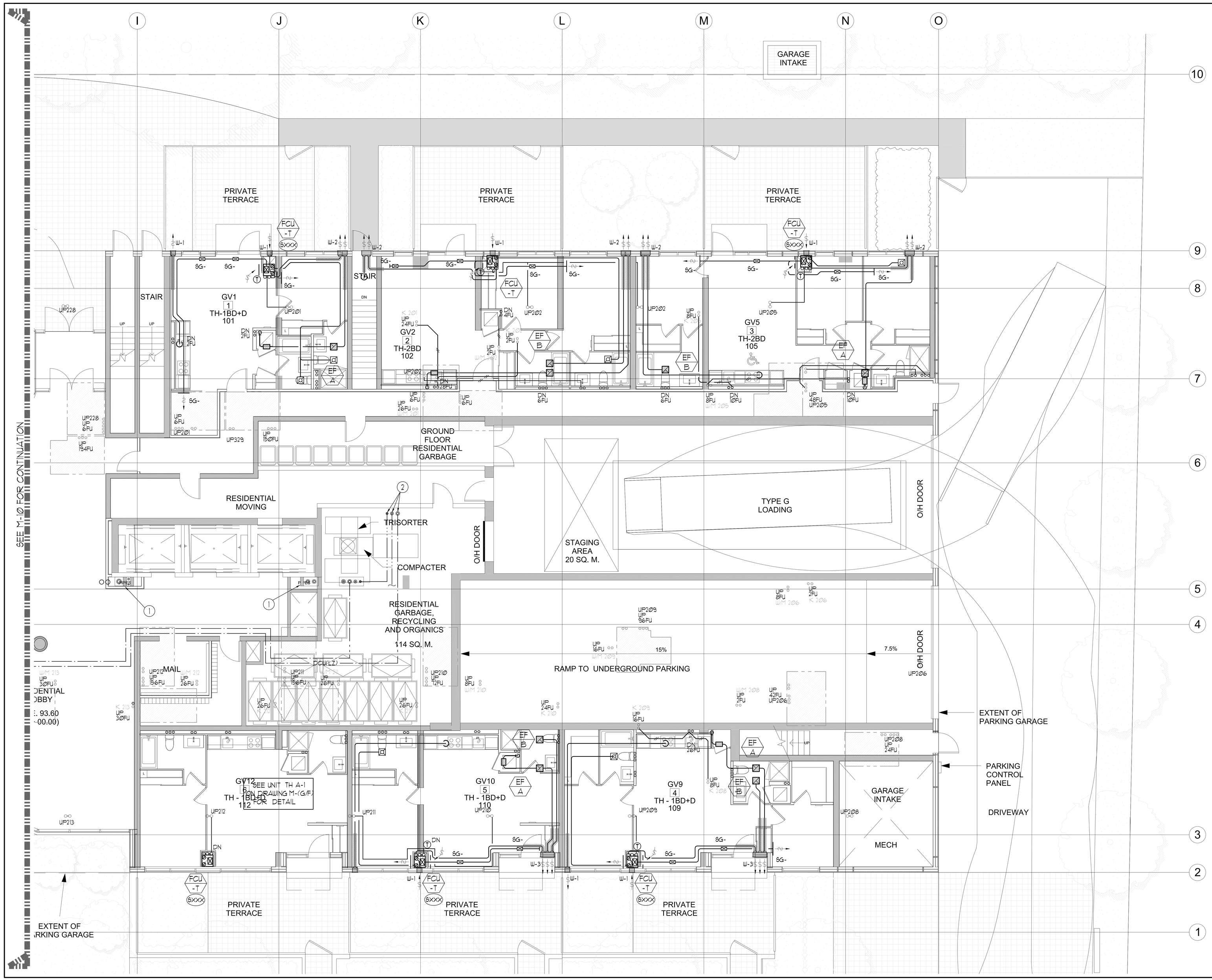

REFER TO DWG. M-X FOR GENERAL AND ACOUSTIC NOTES

FLOOR TO UNDERSLAB △: -mm CLEAR
CEILING HEIGHT = 4200 mm
AMENITY & LOBBY CEILING HEIGHT = 3350 mm
AMENITY & LOBBY TRANSFER SLAB 850mm

NOTES:

1. PIPE SHAFT - REFER TO PIPE RISER DETAIL ON THIS DRAWING FOR DETAILS.
2. ---→ DCW (LZ), ---→ DHW (LZ) & ---→ DHWR FROM BELOW.
3.
4.

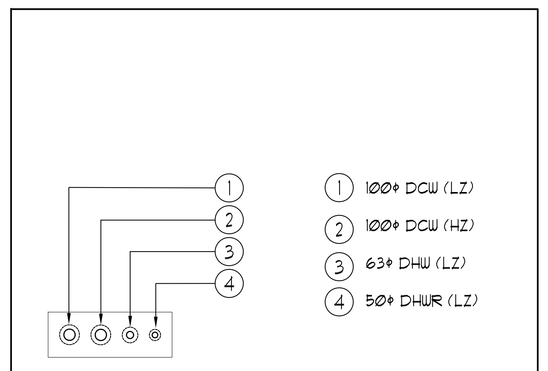

NORTH PIPE SHAFT 2: G/F — NTS

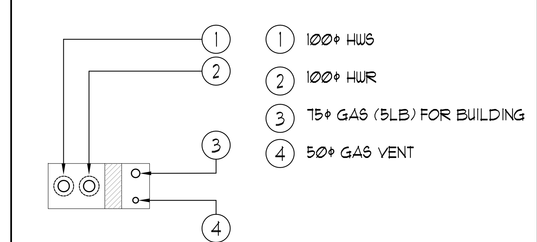

NORTH PIPE SHAFT 1: G/F — NTS

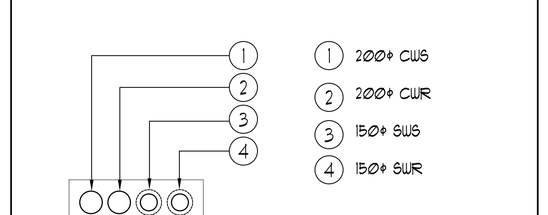

SOUTH PIPE SHAFT: G/F — NTS

LEGEND MECHANICAL

SYMBOL	DESCRIPTION
	SUPPLY AIR DIFFUSER
	SUPPLY AIR TROFFER
	LINEAR SUPPLY DIFFUSER
T	THERMOSTAT
S	FAN SWITCH
	RETURN AIR GRILLE
	EXHAUST AIR GRILLE
	SUPPLY DUCT UP
	SUPPLY DUCT DOWN
	RETURN DUCT UP
	RETURN DUCT DOWN
	EXHAUST DUCT UP
	EXHAUST DUCT DOWN
FD	FIRE DAMPER
BD	BALANCING DAMPER
MD	MOTORIZED DAMPER
MFD	MOTORIZED FIRE DAMPER
BDD	BACKDRAFT DAMPER
OBD	OPPOSED BLADE VOLUME CONTROL DAMPER C/W LOCKING QUADRANT
	TURNING VANES
	FLEXIBLE CONNECTION
	ACOUSTIC INSULATION
	TYPE OF EQUIPMENT / EQUIPMENT IDENTIFICATION
	TYPE OF DIFFUSER OR GRILLE / GRILLE SIZE OR DIFFUSER NECK SIZE / AIRFLOW CFM OR L/S
	STARTER (3 PHASE , 1 PHASE)
S	IN-SUITE ERV MASTER SWITCH
S	FAN SWITCH / IN-SUITE ERV OVERRIDE BUTTON
CO	CO SENSOR
G	GAS LINE
G	GAS METER
	GAS COCK
PR	PRESSURE REDUCING VALVE
	SANITARY ABOVE GRADE
	SANITARY BELOW GRADE
	STORM ABOVE GRADE
	STORM BELOW GRADE
	DOMESTIC COLD WATER
	DOMESTIC HOT WATER
	DOMESTIC HOT WATER RECIRCULATION
	SANITARY VENT
	WATER METER
FD	FLOOR DRAIN
FFD	FUNNEL FLOOR DRAIN
HD	HUB DRAIN
RD	ROOF DRAIN
BLD	BLAB DRAIN
AD	AREA DRAIN
BLAD	BI-LEVEL AREA DRAIN
CB	CATCH BASIN
	SANITARY TRAP
	ELBOW UP
	ELBOW DOWN
CO	WALL CLEANOUT
CO	FLOOR CLEANOUT
HB	HOSE BIBB
NFHB	NON-FREEZE HOSE BIBB
	GLOBE VALVE
	GATE VALVE
	BALL VALVE
	BUTTERFLY VALVE
	PRESSURE REDUCING VALVE
	CHECK VALVE
	CAP
	COMPRESSED AIR OUTLET
BV	BACKFLOW PREVENTER
	CIRCUIT BALANCING VALVE
	MULTIPLE PIPES / / - DENOTES NO. OF PIPES
T	TEMPERATURE SENSOR
T	THERMOMETER
2WV	2-WAY MODULATING VALVE
3WV	3-WAY MODULATING VALVE
T	1/2"x4"(2) THERMOWELL C/W 1/2" BUSHING & 1/2" PLUG
XXX	FLOOR ELEVATION ABOVE LEVEL
XXX	FLOOR ELEVATION THIS LEVEL
XXX	HEADROOM (FLOOR TO U/S HEADER)

REV/QTY		ISSUED FOR ---		E.P.
DATE	NO.	DESCRIPTION		BY

MARK VOID ALL PRINTS DATED PREVIOUS TO FINAL DATE ABOVE

REVISIONS

CONTRACTOR MUST CHECK AND VERIFY ALL DIMENSIONS AND CONDITIONS ON THE JOB AND REPORT DISCREPANCIES TO THE ENGINEERS BEFORE PROCEEDING WITH THE WORK. THIS DRAWING IS THE PROPERTY OF THE ENGINEERS AND MUST BE RETURNED UPON COMPLETION OF THE WORK.

DRAWINGS ARE NOT TO BE SCALED

NOVA TREND ENGINEERING GROUP LTD.
178 West Beaver Creek Road, Unit 31
Richmond Hill, Ontario L4B 3M1
Tel: 905 882-5445
Fax: 905 882-5447
Email: cad@novatrendeng.com

DRAWING TITLE:
G/F NORTH
P4D LAYOUT

PROJECT TITLE:
ALEXANDRA PARK
XXX
TORONTO ONTARIO

DRAWN BY:	CHECKED BY:	SCALE:
G.S.	E.P.	1:50
DATE: FEB. 13	PROJECT NUMBER: 1313	DRAWING NUMBER: M-11 OF 39

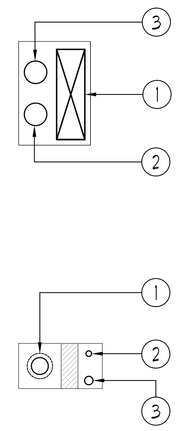

1. SOUTH F/A SHAFT B
2. 200ø CWS
3. 200ø CWR

1. 150ø SWS
2. 50ø GAS VENT
3. 75ø GAS (5LB.) FOR BUILDING

SOUTH PIPE SHAFT: 2/F -7/F. | NTS

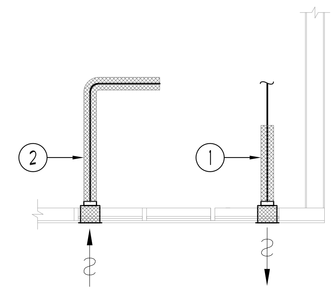

1. EXHAUST DUCTWORK TO BE C/W 1" THICK THERMAL INSULATION 6FT. FROM EXTERNAL WALL. (TYPICAL)
2. F/A INTAKE DUCTWORK TO BE C/W 1" THICK THERMAL INSULATION FOR ENTIRE LENGTH FROM EXTERIOR WALL TO ERV FCU. (TYPICAL)

TYPICAL DETAIL: INSULATION FOR INTAKE/EXHAUST DUCTWORK | NTS

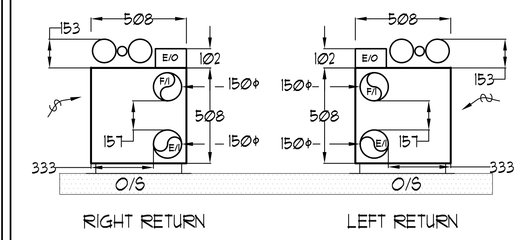

NOTE:
- ALL DIMENSIONS IN MM.
- HEIGHT OF FCU IS 2,023.

INSUITE FCU DIMENSIONS | NTS

UNIT	NAME	AREA (SQ. FT.)	# OF WR	# OF POWDER	SIZE (T)	FIXTURE UNITS	BR	SQ. FT/T

GRILLE SIZING TABLE

DESIGNATION	SIZE	L/S	(UNLESS SPECIFIED ELSEWHERE)
SG-A	300x100	47-70	
SG-B	300x150	71-93	
SG-C	400x150	94-140	
SG-D	450x150	141-188	
EG-A	150x150	35	
W-1	225x200	210mm(L)	
W-2	425x200	INSULATED	
W-3	625x200	WALL BOX	

VERTICAL FAN COIL SIZE

DESIGNATION	MODEL	W x D
FCU-1T	450	508x660
FCU-1.5T	600	508x660
FCU-2T	800	508x660
FCU-2.5T	1000	559x660
FCU-3T	1200	559x660

NOTE:
A MIN. OF 125mm IS REQUIRED ON THE SIDE OF PIPE RISER.

DUCT SIZING TABLE
(4.06 m/s, 800 FPM)

DESIGNATION	L/s	DUCT SIZE	DESIGNATION	L/s	DUCT SIZE
A	47	100x150	G	188	350x150
B	71	150x150	H	236	450x150
C	94	200x150	J	283	500x150
D	118	200x150	K	330	600x150
E	141	250x150	L	377	500x200
F	165	300x150			

GENERAL NOTES:

1) CONTRACTOR SHALL CO-ORDINATE ARCHITECTURAL, STRUCTURAL, LIGHTING, HVAC, SPRINKLER DRAWINGS TO AVOID AREAS OF CONFLICT AND TO MAINTAIN CEILING HEIGHTS.

2) CONTRACTOR SHALL REPORT ALL DISCREPANCIES AND AREA OF CONFLICTS TO THE ENGINEER PRIOR TO WORK BEGINS.

3) PROVIDE EXPANSION CHAMBERS FOR ALL KITCHEN SINKS.

4) SEE INSTALLATION DETAILS DRAWING FOR WASHER DOM. H+C WATER, SANITARY CONNECTION DETAILS.

5) SUPPLY AND INSTALL COMPLETE DOMESTIC HOT AND COLD WATER LINES, SANITARY AND VENT LINES TO EACH FIXTURE /EQUIPMENT INCLUDING WATER CLOSETS, LAVATORIES, BATHS, SHOWERS, KITCHEN SINK, WASHING MACHINES, DISHWASHERS, AND FLOOR DRAINS. KITCHEN SINK, LAVATORIES, WATER CLOSETS AND WASHING MACHINE TO BE C/W LOCALIZED SHUT-OFF VALVES.

6) ALL VENT PIPE INSTALLATION TO COMPLY WITH PLUMBING CODES.

7) FOR D.H.C. W. RISER SIZES, REFER TO RISER DIAGRAM

8) FIRE DAMPERS ARE REQUIRED TO BE LISTED AND ARE TO HAVE FIRE PROTECTION RATING OF THE PENETRATED FIRE SEPARATION.

9) THE PIPING PENETRATING THE VARIOUS FIRE SEPARATION IS REQUIRED TO BE FIRESTOPPED WITH A LISTED FIRESTOPPING MATERIAL IN ACCORDANCE WITH OBC ARTICLE 3.1.9.1

10) THE FIRE HOSE CABINET THAT ARE RECESSED INTO THE EXIT STAIR SHAFTS ARE REQUIRED TO BE SEPARATED FROM THE EXIT STAIR BY A 2 HR. FIRE SEPARATION.

11) NO FLEXIBLE DUCT SHALL BE USED FOR ANY IN-SUITE DUCTWORK.

12) PROVIDE 25MM EXTERNAL INSULATION TO ENTIRE FRESH AIR DUCT FROM EXTERIOR WALL TO ERV FAN COIL UNIT.

13) DRYER EXHAUST DUCT SHALL BE SMOOTH AND CORROSION-RESISTANT MATERIAL (FLEXIBLE CONNECTION IS NOT ACCEPTABLE).

REFER TO DWG. M-X FOR ACOUSTIC NOTES

⚠ 2750mm CLEAR FLOOR TO UNDERSLAB

NOTES:

1. SOUTH F/A SHAFT A FROM G/F TO 8/F DUCT SERVING CORRIDOR FROM G/F TO 8/F. SEE VENTILATION RISER DIAGRAM FOR DETAILS.
2. SOUTH F/A SHAFT B FROM G/F TO 14/F. F/A DUCT SERVING CORRIDOR FROM 9/F TO 14/F. SEE VENTILATION RISER DIAGRAM FOR DETAILS.
3. PIPE SHAFT - REFER TO PIPE RISER DETAIL ON THIS DRAWING FOR DETAILS.
4. 150ø KITCHEN / DRYER / W/R / FCU INTAKE / FCU EXHAUST DUCT. (TYPICAL UNLESS OTHERWISE NOTED)

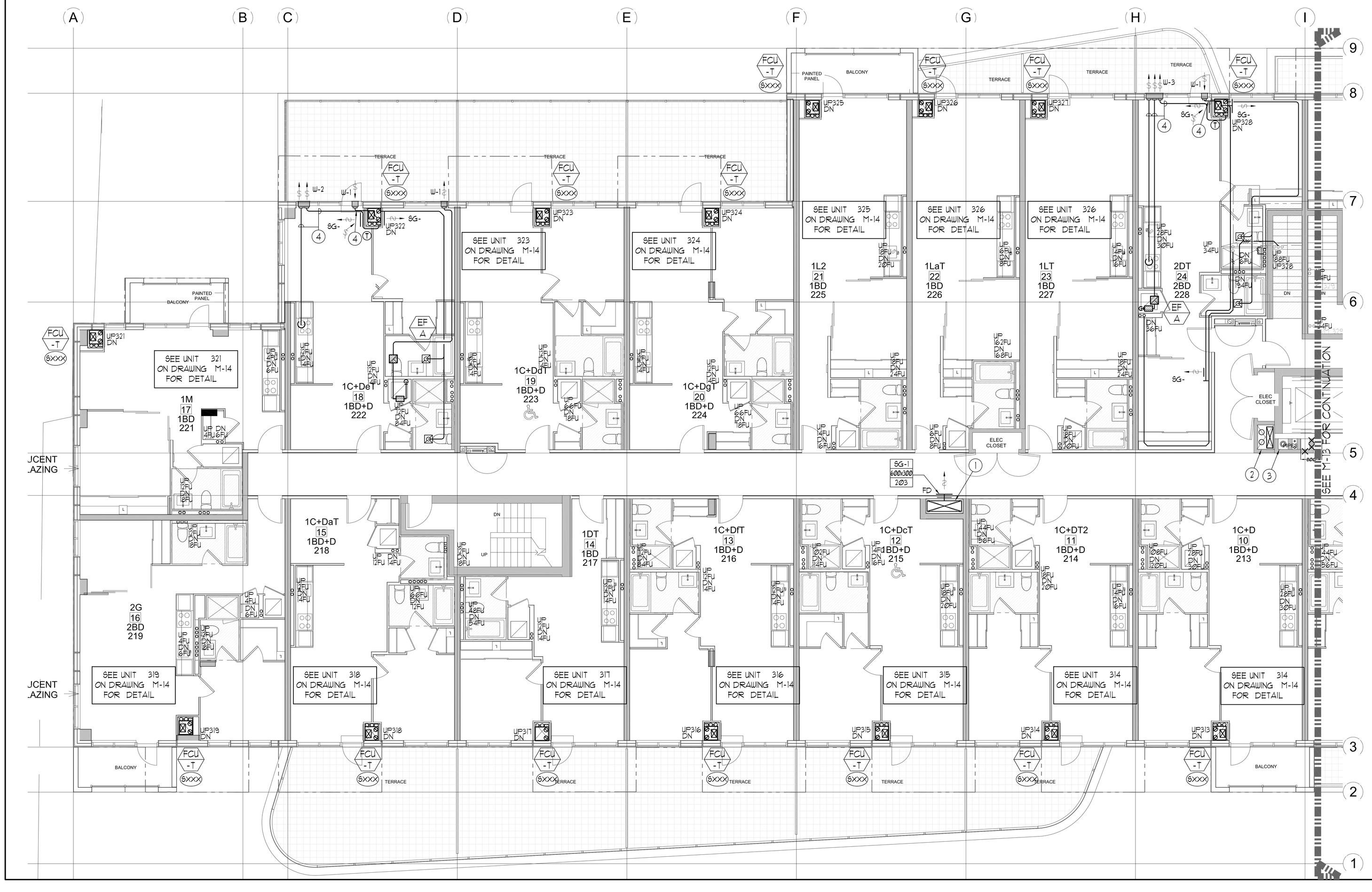

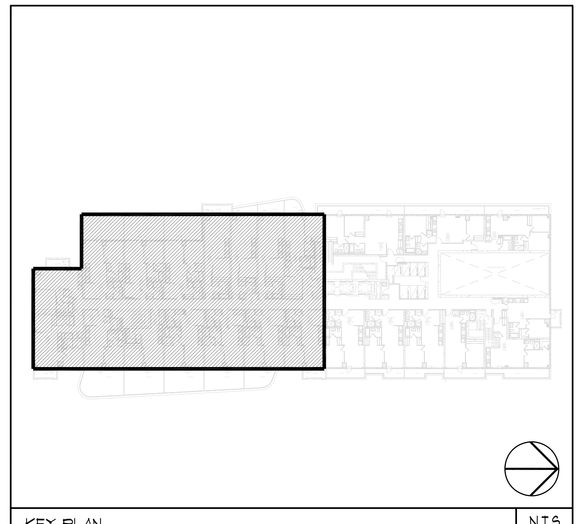

KEY PLAN | N.T.S.

LEGEND MECHANICAL

SYMBOL	DESCRIPTION
	SUPPLY AIR DIFFUSER
	SUPPLY AIR TROFFER
	LINEAR SUPPLY DIFFUSER
T	THERMOSTAT
S	FAN SWITCH
	RETURN AIR GRILLE
	EXHAUST AIR GRILLE
	SUPPLY DUCT UP
	SUPPLY DUCT DOWN
	RETURN DUCT UP
	RETURN DUCT DOWN
	EXHAUST DUCT UP
	EXHAUST DUCT DOWN
FD	FIRE DAMPER
BD	BALANCING DAMPER
MD	MOTORIZED DAMPER
MFD	MOTORIZED FIRE DAMPER
BDD	BACKDRAFT DAMPER
OBD	OPPOSED BLADE VOLUME CONTROL DAMPER C/W LOCKING QUADRANT
	TURNING VANES
	FLEXIBLE CONNECTION
	ACOUSTIC INSULATION
XX	TYPE OF EQUIPMENT EQUIPMENT IDENTIFICATION
XXX	TYPE OF DIFFUSER OR GRILLE GRILLE SIZE OR DIFFUSER NECK SIZE AIRFLOW CFM OR L/S
XX, Y	STARTER / 3 PHASE / PHASE /
S	IN-SUITE ERV MASTER SWITCH
S	FAN SWITCH / IN-SUITE ERV OVERRIDE BUTTON
CO	CO SENSOR
G	GAS LINE
G	GAS METER
G	GAS COCK
PR	PRESSURE REDUCING VALVE
	SANITARY ABOVE GRADE
	SANITARY BELOW GRADE
	STORM ABOVE GRADE
	STORM BELOW GRADE
	DOMESTIC COLD WATER
	DOMESTIC HOT WATER
	DOMESTIC HOT WATER RECIRCULATION
	SANITARY VENT
	WATER METER
FD	FLOOR DRAIN
FFD	FUNNEL FLOOR DRAIN
HD	HUB DRAIN
RD	ROOF DRAIN
BLD	BLAB DRAIN
AD	AREA DRAIN
BLAD	BI-LEVEL AREA DRAIN
CB	CATCH BASIN
	SANITARY TRAP
	ELBOW UP
	ELBOW DOWN
CO	WALL CLEANOUT
CO	FLOOR CLEANOUT
HB	HOSE BIBB
NFHB	NON-FREEZE HOSE BIBB
	GLOBE VALVE
	GATE VALVE
	BALL VALVE
	BUTTERFLY VALVE
	PRESSURE REDUCING VALVE
	CHECK VALVE
	CAP
	COMPRESSED AIR OUTLET
BP	BACKFLOW PREVENTER
BC	CIRCUIT BALANCING VALVE
	MULTIPLE PIPES / - DENOTES NO. OF PIPES
T	TEMPERATURE SENSOR
T	THERMOMETER
	2-WAY MODULATING VALVE
	3-WAY MODULATING VALVE
	1/2"x4"O.D. THERMOWELL C/W 1/2" BUSHING X 1/2" PLUG
XXX	FLOOR ELEVATION ABOVE LEVEL
XXX	FLOOR ELEVATION THIS LEVEL
XXX	HEADROOM (FLOOR TO U/S HEIGHT)

REV/DIT				

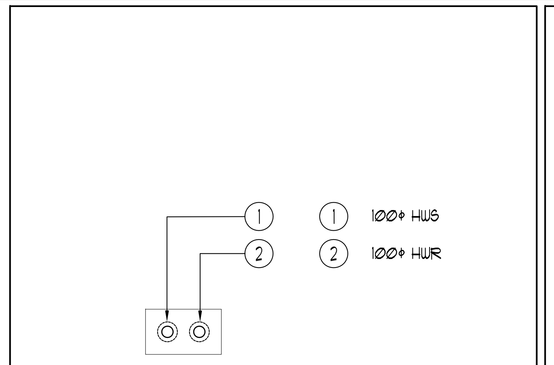

NORTH PIPE SHAFT A: 2/F -T/F | NTS

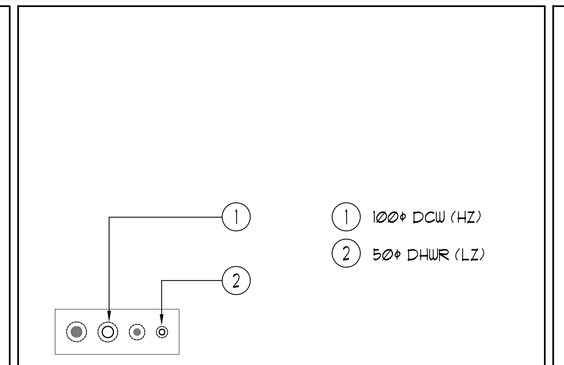

NORTH PIPE SHAFT B: 2/F -T/F | NTS

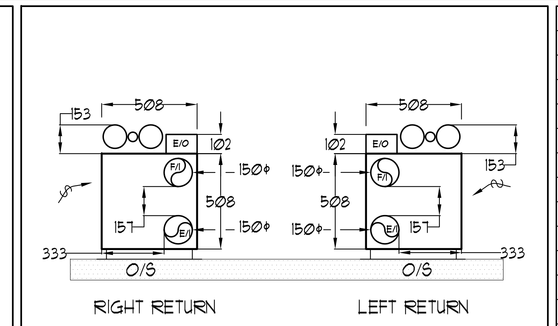

NOTE:
- ALL DIMENSIONS IN MM.
- HEIGHT OF FCU IS 2,023.

INSUITE FCU DIMENSIONS | NTS

UNIT	NAME	AREA (SQ. FT.)	# OF WR	# OF POWDER	SIZE (T)	FIXTURE UNITS	BR	SQ. FT/T

GRILLE SIZING TABLE			
DESIGNATION	SIZE	L/S	(UNLESS SPECIFIED ELSEWHERE)
SG-A	300x100	47-70	
SG-B	300x150	71-93	
SG-C	400x150	94-140	
SG-D	450x150	141-188	
EG-A	150x150	35	
W-1	225x200	210mm(L)	
W-2	425x200	INSULATED	
W-3	625x200	WALL BOX	

VERTICAL FAN COIL SIZE		
DESIGNATION	MODEL	W x D
FCU-1T	450	500x660
FCU-1.5T	600	500x660
FCU-2T	800	500x660
FCU-2.5T	1000	559x660
FCU-3T	1200	559x660

NOTE:
A MIN. OF 125mm IS REQUIRED ON THE SIDE OF PIPE RISER.

DUCT SIZING TABLE (4.06 m/s, 800 FPM)					
DESIGNATION	L/s	DUCT SIZE	DESIGNATION	L/s	DUCT SIZE
A	47	100x150	G	189	350x150
B	71	150x150	H	236	450x150
C	94	200x150	J	283	500x150
D	118	200x150	K	330	600x150
E	141	250x150	L	377	500x200
F	165	300x150			

GENERAL NOTES:

1) CONTRACTOR SHALL CO-ORDINATE ARCHITECTURAL, STRUCTURAL, LIGHTING, HVAC, SPRINKLER DRAWINGS TO AVOID AREAS OF CONFLICT AND TO MAINTAIN CEILING HEIGHTS.

2) CONTRACTOR SHALL REPORT ALL DISCREPANCIES AND AREA OF CONFLICTS TO THE ENGINEER PRIOR TO WORK BEGINS.

3) PROVIDE EXPANSION CHAMBERS FOR ALL KITCHEN SINKS.

4) SEE INSTALLATION DETAILS DRAWING FOR WASHER DOM. H+C WATER, SANITARY CONNECTION DETAILS.

5) SUPPLY AND INSTALL COMPLETE DOMESTIC HOT AND COLD WATER LINES, SANITARY AND VENT LINES TO EACH FIXTURE /EQUIPMENT INCLUDING WATER CLOSETS, LAVATORIES, BATHS, SHOWERS, KITCHEN SINK, WASHING MACHINES, DISHWASHERS, AND FLOOR DRAINS. KITCHEN SINK, LAVATORIES, WATER CLOSETS AND WASHING MACHINE TO BE C/W LOCALIZED SHUT-OFF VALVES.

6) ALL VENT PIPE INSTALLATION TO COMPLY WITH PLUMBING CODES.

7) FOR D.H.C. W. RISER SIZES, REFER TO RISER DIAGRAM

8) FIRE DAMPERS ARE REQUIRED TO BE LISTED AND ARE TO HAVE FIRE PROTECTION RATING OF THE PENETRATED FIRE SEPARATION.

9) THE PIPING PENETRATING THE VARIOUS FIRE SEPARATION IS REQUIRED TO BE FIRESTOPPED WITH A LISTED FIRESTOPPING MATERIAL IN ACCORDANCE WITH OBC ARTICLE 3.1.9.1

10) THE FIRE HOSE CABINET THAT ARE RECESSED INTO THE EXIT STAIR SHAFTS ARE REQUIRED TO BE SEPARATED FROM THE EXIT STAIR BY A 2 HR. FIRE SEPARATION.

11) NO FLEXIBLE DUCT SHALL BE USED FOR ANY IN-SUITE DUCTWORK.

12) PROVIDE 25MM EXTERNAL INSULATION TO ENTIRE FRESH AIR DUCT FROM EXTERIOR WALL TO ERV FAN COIL UNIT.

13) DRYER EXHAUST DUCT SHALL BE SMOOTH AND CORROSION-RESISTANT MATERIAL (FLEXIBLE CONNECTION IS NOT ACCEPTABLE).

REFER TO DWG. M-X FOR ACOUSTIC NOTES

⚠ 2750mm CLEAR FLOOR TO UNDERSLAB

NOTES:

1. NORTH F/A SHAFT SERVING FROM G/F TO 14/F. F/A DUCT SERVING CORRIDOR FROM G/F TO 14/F. SEE VENTILATION RISER DIAGRAM FOR DETAILS.
2. PIPE SHAFT - REFER TO PIPE RISER DETAIL ON THIS DRAWING FOR DETAILS.
3. 150ø KITCHEN / DRYER / WR / FCU INTAKE / FCU EXHAUST DUCT. (TYPICAL UNLESS OTHERWISE NOTED)

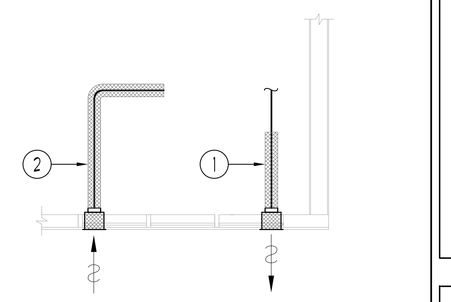

1. EXHAUST DUCTWORK TO BE C/W 1" THICK THERMAL INSULATION 6FT. FROM EXTERNAL WALL. (TYPICAL)
2. F/A INTAKE DUCTWORK TO BE C/W 1" THICK THERMAL INSULATION FOR ENTIRE LENGTH FROM EXTERIOR WALL TO ERV FCU. (TYPICAL)

TYPICAL DETAIL: INSULATION FOR INTAKE/EXHAUST DUCTWORK | NTS

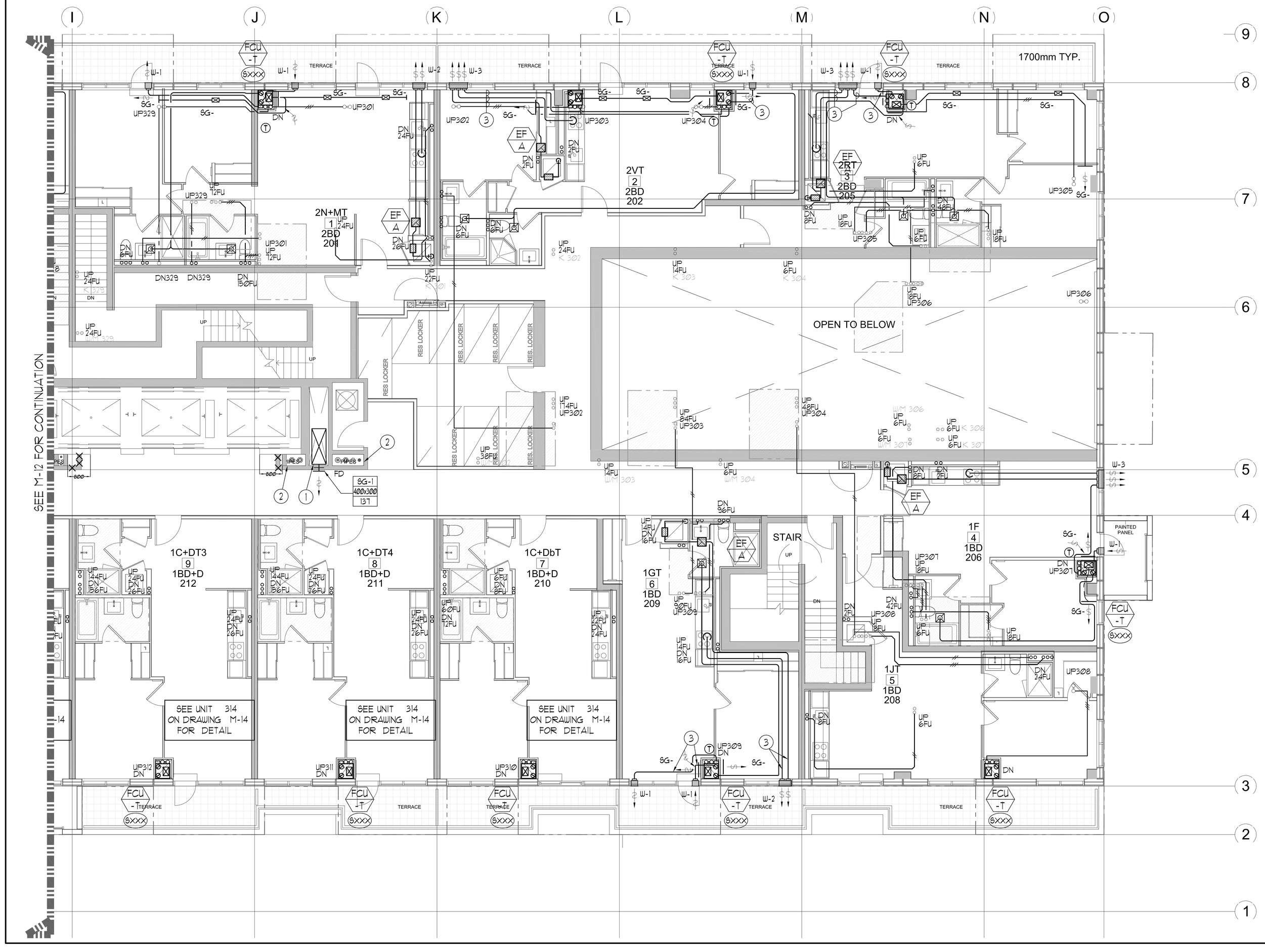

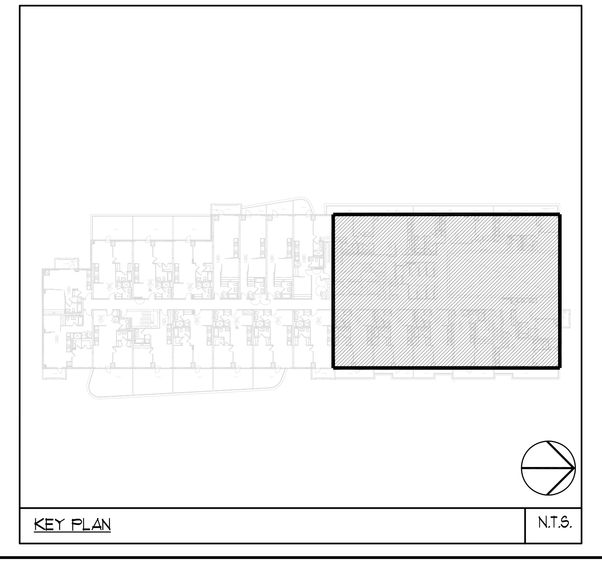

KEY PLAN | N.T.S.

LEGEND
MECHANICAL

SYMBOL	DESCRIPTION
	SUPPLY AIR DIFFUSER
	SUPPLY AIR TROFFER
	LINEAR SUPPLY DIFFUSER
T	THERMOSTAT
S	FAN SWITCH
	RETURN AIR GRILLE
	EXHAUST AIR GRILLE
	SUPPLY DUCT UP
	SUPPLY DUCT DOWN
	RETURN DUCT UP
	RETURN DUCT DOWN
	EXHAUST DUCT UP
	EXHAUST DUCT DOWN
FD	FIRE DAMPER
BD	BALANCING DAMPER
MD	MOTORIZED DAMPER
MFD	MOTORIZED FIRE DAMPER
BDD	BACKDRAFT DAMPER
OBD	OPPOSED BLADE VOLUME CONTROL DAMPER C/W LOCKING QUADRANT
	TURNING VANES
	FLEXIBLE CONNECTION
	ACOUSTIC INSULATION
XX	TYPE OF EQUIPMENT EQUIPMENT IDENTIFICATION
XXX XXX	TYPE OF DIFFUSER OR GRILLE GRILLE SIZE OR DIFFUSER NECK SIZE AIRFLOW (CFM OR L/s)
XX, X	STARTER (3 PHASE , 1 PHASE)
S	IN-SUITE ERV MASTER SWITCH
S	FAN SWITCH / IN-SUITE ERV OVERRIDE BUTTON
CO	CO SENSOR
G	GAS LINE
G	GAS METER
G	GAS COCK
PR	PRESSURE REDUCING VALVE
	SANITARY ABOVE GRADE
	SANITARY BELOW GRADE
	STORM ABOVE GRADE
	STORM BELOW GRADE
	DOMESTIC COLD WATER
	DOMESTIC HOT WATER
	DOMESTIC HOT WATER RECIRCULATION
	SANITARY VENT
WM	WATER METER
FD	FLOOR DRAIN
FFD	FUNNEL FLOOR DRAIN
HD	HUB DRAIN
RD	ROOF DRAIN
BLD	BLAB DRAIN
AD	AREA DRAIN
BLAD	BI-LEVEL AREA DRAIN
CB	CATCH BASIN
	SANITARY TRAP
	ELBOW UP
	ELBOW DOWN
CO	WALL CLEANOUT
CO	FLOOR CLEANOUT
HB	HOSE BIBB
NFHB	NON-FREEZE HOSE BIBB
	GLOBE VALVE
	GATE VALVE
	BALL VALVE
	BUTTERFLY VALVE
	PRESSURE REDUCING VALVE
	CHECK VALVE
	CAP
CA	COMPRESSED AIR OUTLET
BP	BACKFLOW PREVENTER
	CIRCUIT BALANCING VALVE
	MULTIPLE PIPES / - DENOTES NO. OF PIPES
T	TEMPERATURE SENSOR
T	THERMOMETER
	2-WAY MODULATING VALVE
	3-WAY MODULATING VALVE
T	1/2"x4"(1) THERMOWELL C/W 1/2" BUSHING x 1/2" PLUG
XXXX	FLOOR ELEVATION ABOVE LEVEL
XXXX	FLOOR ELEVATION THIS LEVEL
XXXX	HEADROOM (FLOOR TO U/S HEIGHT)

PRIORITY	1	ISSUED FOR ----	E.P.
DATE	NO.	DESCRIPTION	BY

THINK VOID ALL PRINTS DATED PREVIOUS TO FINAL DATE ABOVE

REVISIONS

CONTRACTOR MUST CHECK AND VERIFY ALL DIMENSIONS AND CONDITIONS ON THE JOB AND REPORT DISCREPANCIES TO THE ENGINEERS BEFORE PROCEEDING WITH THE WORK. THIS DRAWING IS THE PROPERTY OF THE ENGINEERS AND MUST BE RETURNED UPON COMPLETION OF THE WORK.

DRAWINGS ARE NOT TO BE SCALED

NOVA TREND ENGINEERING

73B West Beaver Creek Road, Unit 31
Richmond Hill, Ontario L4B 3M1
Tel: 905 882-5448
Fax: 905 882-5447
Email: cad@novatrendeng.com

DRAWING TITLE
2/F NORTH
MECHANICAL LAYOUT

PROJECT TITLE
ALEXANDRA PARK

XXX
TORONTO ONTARIO

DRAWN BY:	CHECKED BY:	SCALE:
G.S.	E.P.	1:50
DATE: FEB, 13	PROJECT NUMBER: 1313	DRAWING NUMBER: M-13 OF 35

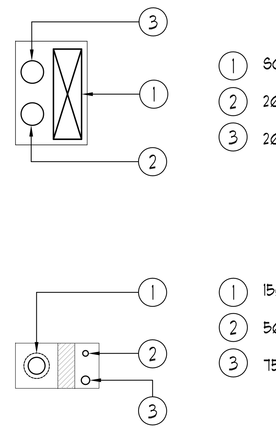

SOUTH PIPE SHAFT: 2/F -T/F. NTS

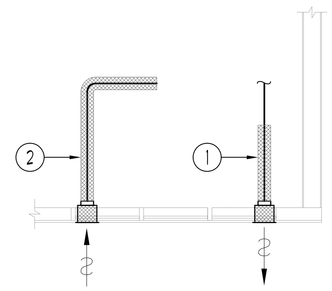

1 EXHAUST DUCTWORK TO BE C/W 1" THICK THERMAL INSULATION 6FT. FROM EXTERNAL WALL. (TYPICAL)

2 F/A INTAKE DUCTWORK TO BE C/W 1" THICK THERMAL INSULATION FOR ENTIRE LENGTH FROM EXTERIOR WALL TO ERV FCU. (TYPICAL)

TYPICAL DETAIL: INSULATION FOR INTAKE/EXHAUST DUCTWORK NTS

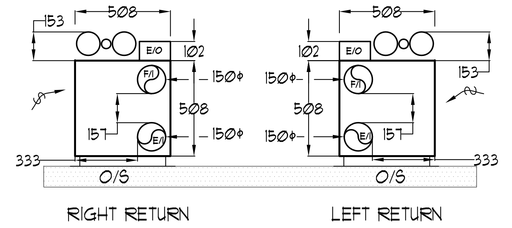

NOTE:
- ALL DIMENSIONS IN MM.
- HEIGHT OF FCU IS 2,073.

INSUITE FCU DIMENSIONS NTS

UNIT	NAME	AREA (SQ. FT.)	# OF W/R	# OF POWDER	SIZE (T)	FIXTURE UNITS	BR	SQ. FT/T

GRILLE SIZING TABLE		
DESIGNATION	SIZE	L/S (UNLESS SPECIFIED ELSEWHERE)
SG-A	300x100	47-70
SG-B	300x150	71-93
SG-C	400x150	94-140
SG-D	450x150	141-188
EG-A	150x150	35
W-1	225x200	210mm(L)
W-2	425x200	INSULATED
W-3	625x200	WALL BOX

VERTICAL FAN COIL SIZE		
DESIGNATION	MODEL	W x D
FCU-1T	450	508x660
FCU-1.5T	600	508x660
FCU-2T	800	508x660
FCU-2.5T	1000	559x660
FCU-3T	1200	559x660

NOTE:
A MIN. OF 175mm IS REQUIRED ON THE SIDE OF PIPE RISER.

DUCT SIZING TABLE (4.06 m/s, 800 FPM)					
DESIGNATION	L/s	DUCT SIZE	DESIGNATION	L/s	DUCT SIZE
A	47	100x150	G	189	350x150
B	71	150x150	H	236	450x150
C	94	200x150	J	283	500x150
D	118	200x150	K	330	600x150
E	141	250x150	L	377	500x200
F	165	300x150			

GENERAL NOTES:

1) CONTRACTOR SHALL CO-ORDINATE ARCHITECTURAL, STRUCTURAL, LIGHTING, HVAC, SPRINKLER DRAWINGS TO AVOID AREAS OF CONFLICT AND TO MAINTAIN CEILING HEIGHTS.

2) CONTRACTOR SHALL REPORT ALL DISCREPANCIES AND AREA OF CONFLICTS TO THE ENGINEER PRIOR TO WORK BEGINS.

3) PROVIDE EXPANSION CHAMBERS FOR ALL KITCHEN SINKS.

4) SEE INSTALLATION DETAILS DRAWING FOR WASHER DOM. H+C WATER, SANITARY CONNECTION DETAILS.

5) SUPPLY AND INSTALL COMPLETE DOMESTIC HOT AND COLD WATER LINES, SANITARY AND VENT LINES TO EACH FIXTURE /EQUIPMENT INCLUDING WATER CLOSETS, LAVATORIES, BATHS, SHOWERS, KITCHEN SINK, WASHING MACHINES, DISHWASHERS, AND FLOOR DRAINS. KITCHEN SINK, LAVATORIES, WATER CLOSETS AND WASHING MACHINE TO BE C/W LOCALIZED SHUT-OFF VALVES.

6) ALL VENT PIPE INSTALLATION TO COMPLY WITH PLUMBING CODES.

7) FOR D.H.C. W. RISER SIZES, REFER TO RISER DIAGRAM

8) FIRE DAMPERS ARE REQUIRED TO BE LISTED AND ARE TO HAVE FIRE PROTECTION RATING OF THE PENETRATED FIRE SEPARATION.

9) THE PIPING PENETRATING THE VARIOUS FIRE SEPARATION IS REQUIRED TO BE FIRESTOPPED WITH A LISTED FIRESTOPPING MATERIAL IN ACCORDANCE WITH OBC ARTICLE 3.1.9.)

10) THE FIRE HOSE CABINET THAT ARE RECESSED INTO THE EXIT STAIR SHAFTS ARE REQUIRED TO BE SEPARATED FROM THE EXIT STAIR BY A 2 HR. FIRE SEPARATION.

11) NO FLEXIBLE DUCT SHALL BE USED FOR ANY IN-SUITE DUCTWORK.

12) PROVIDE 25MM EXTERNAL INSULATION TO ENTIRE FRESH AIR DUCT FROM EXTERIOR WALL TO ERV FAN COIL UNIT.

13) DRYER EXHAUST DUCT SHALL BE SMOOTH AND CORROSION-RESISTANT MATERIAL (FLEXIBLE CONNECTION IS NOT ACCEPTABLE).

REFER TO DWG. M-X FOR ACOUSTIC NOTES

2590mm CLEAR FLOOR TO UNDERSLAB

NOTES:

1) SOUTH F/A SHAFT A FROM G/F TO 8/F DUCT SERVING CORRIDOR FROM G/F TO 8/F. SEE VENTILATION RISER DIAGRAM FOR DETAILS.

2) SOUTH F/A SHAFT B FROM G/F TO 14/F. F/A DUCT SERVING CORRIDOR FROM 9/F TO 14/F. SEE VENTILATION RISER DIAGRAM FOR DETAILS.

3) PIPE SHAFT - REFER TO PIPE RISER DETAIL ON THIS DRAWING FOR DETAILS.

4) 150ø KITCHEN / DRYER / W/R / FCU INTAKE / FCU EXHAUST DUCT. (TYPICAL UNLESS OTHERWISE NOTED)

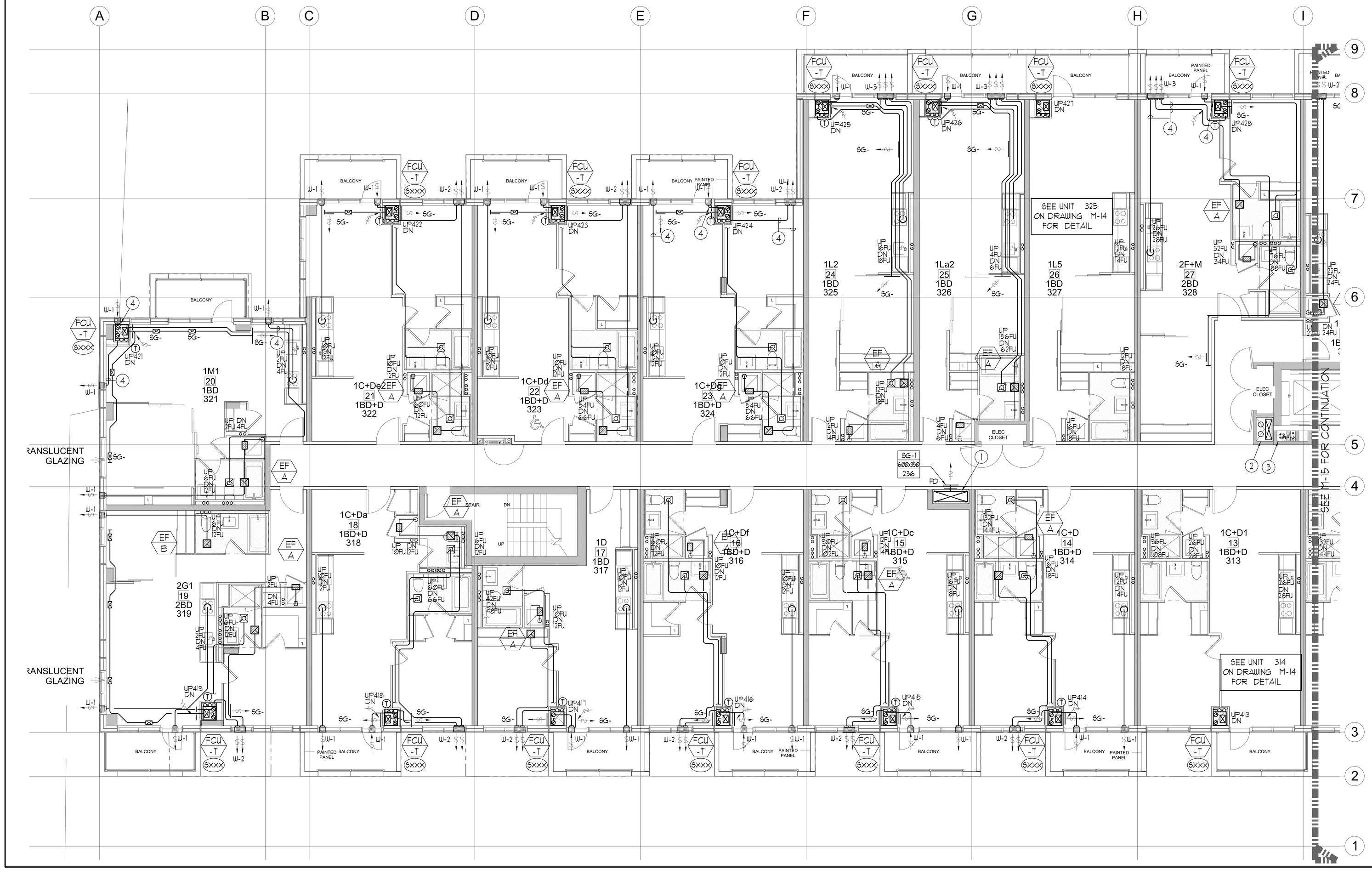

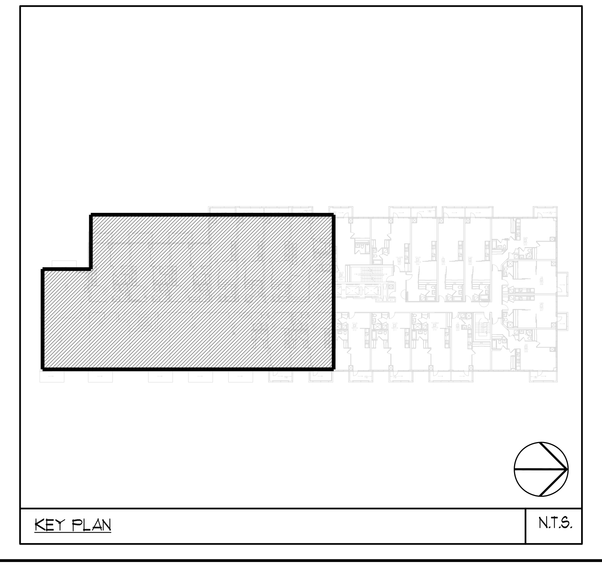

KEY PLAN N.T.S.

LEGEND MECHANICAL

SYMBOL	DESCRIPTION
	SUPPLY AIR DIFFUSER
	SUPPLY AIR TROFFER
	LINEAR SUPPLY DIFFUSER
T	THERMOSTAT
S	FAN SWITCH
	RETURN AIR GRILLE
	EXHAUST AIR GRILLE
	SUPPLY DUCT UP
	SUPPLY DUCT DOWN
	RETURN DUCT UP
	RETURN DUCT DOWN
	EXHAUST DUCT UP
	EXHAUST DUCT DOWN
FD	FIRE DAMPER
BD	BALANCING DAMPER
MD	MOTORIZED DAMPER
MFD	MOTORIZED FIRE DAMPER
BDD	BACKDRAFT DAMPER
OBD	OPPOSED BLADE VOLUME CONTROL DAMPER C/W LOCKING QUADRANT
	TURNING VANES
	FLEXIBLE CONNECTION
	ACOUSTIC INSULATION
	TYPE OF EQUIPMENT / EQUIPMENT IDENTIFICATION
	TYPE OF DIFFUSER OR GRILLE / GRILLE SIZE OR DIFFUSER NECK SIZE / AIRFLOW (CFM OR L/s)
	STARTER (3 PHASE , 1 PHASE)
	IN-SUITE ERV PASTER SWITCH
	FAN SWITCH / IN-SUITE ERV OVERRIDE BUTTON
	CO SENSOR
	GAS LINE
	GAS METER
	GAS COCK
	PRESSURE REDUCING VALVE
	SANITARY ABOVE GRADE
	SANITARY BELOW GRADE
	STORM ABOVE GRADE
	STORM BELOW GRADE
	DOMESTIC COLD WATER
	DOMESTIC HOT WATER
	DOMESTIC HOT WATER RECIRCULATION
	SANITARY VENT
	WATER METER
FD	FLOOR DRAIN
FFD	FUNNEL FLOOR DRAIN
HD	HUB DRAIN
RD	ROOF DRAIN
BLD	BLAB DRAIN
AD	AREA DRAIN
BLAD	BI-LEVEL AREA DRAIN
CB	CATCH BASIN
	SANITARY TRAP
	ELBOW UP
	ELBOW DOWN
CO	WALL CLEANOUT
CO	FLOOR CLEANOUT
HB	HOSE BIBB
NFHB	NON-FREEZE HOSE BIBB
	GLOBE VALVE
	GATE VALVE
	BALL VALVE
	BUTTERFLY VALVE
	PRESSURE REDUCING VALVE
	CHECK VALVE
	CAP
	COMPRESSED AIR OUTLET
	BACKFLOW PREVENTER
	CIRCUIT BALANCING VALVE
	MULTIPLE PIPES / - DENOTES NO. OF PIPES
	TEMPERATURE SENSOR
	THERMOMETER
	2-WAY MODULATING VALVE
	3-WAY MODULATING VALVE
	1/2"x4"(1) THERMOWELL C/W 1/2" BUSHING + 1/2" PLUG
XXX	-FLOOR ELEVATION ABOVE LEVEL
XXX	-FLOOR ELEVATION THIS LEVEL
XXX	-HEADROOM (FLOOR TO U/S HEIGHT)

PROJECT/TY	I	ISSUED FOR ---	E.P.
DATE	NO.	DESCRIPTION	BY

THANK VOID ALL PRINTS DATED PREVIOUS TO FINAL DATE ABOVE

REVISIONS

CONTRACTOR MUST CHECK AND VERIFY ALL DIMENSIONS AND CONDITIONS ON THE JOB AND REPORT DISCREPANCIES TO THE ENGINEERS BEFORE PROCEEDING WITH THE WORK. THIS DRAWING IS THE PROPERTY OF THE ENGINEERS AND MUST BE RETURNED UPON COMPLETION OF THE WORK.

DRAWINGS ARE NOT TO BE SCALED

NOVA TREND ENGINEERING
175 West Beaver Creek Road, Unit 31
Richmond Hill, Ontario L4B 3M1
Tel: 905 882-9448
Fax: 905 882-9447
Email: cad@novatrendeng.com

DRAWING TITLE
3/F SOUTH
MECHANICAL LAYOUT

PROJECT TITLE
ALEXANDRA PARK

XXX
TORONTO ONTARIO

DRAWN BY:	CHECKED BY:	SCALE:
G.S.	E.P.	1:50
DATE: FEB. 13	PROJECT NUMBER: 1313	DRAWING NUMBER: M-14 OF 35

Drawing name: \\CADSERVER\Current Dwg\1313\1313 - Alexandra Park\2013\1313M - M-15(3F PLAN - SOUTH & NORTH MECHANICAL LAYOUT).dwg Plotted: Mar 12, 2014 - 3:41pm

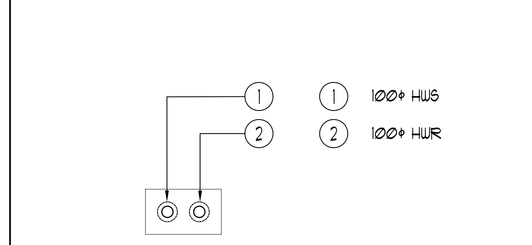

NORTH PIPE SHAFT A: 2/F -T/F | NTS

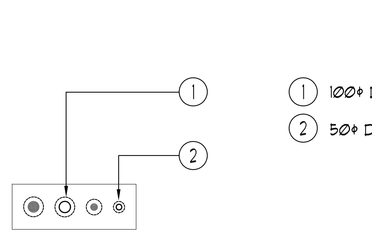

NORTH PIPE SHAFT B: 2/F -T/F | NTS

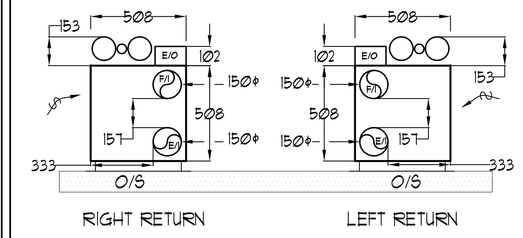

NOTE:
- ALL DIMENSIONS IN MM.
- HEIGHT OF FCU IS 2,023.

INSUITE FCU DIMENSIONS | NTS

UNIT	NAME	AREA (SQ. FT.)	# OF WR	# OF POWDER	SIZE (T)	FIXTURE UNITS	BR	SQ. FT/T

GRILLE SIZING TABLE

DESIGNATION	SIZE	L/S (UNLESS SPECIFIED ELSEWHERE)
SG-A	300x100	47-70
SG-B	300x150	71-93
SG-C	400x150	94-140
SG-D	450x150	141-188
EG-A	150x150	35
W-1	225x200	210mm(L)
W-2	425x200	INSULATED
W-3	625x200	WALL BOX

VERTICAL FAN COIL SIZE

DESIGNATION	MODEL	W x D
FCU-1T	450	500x660
FCU-1.5T	600	500x660
FCU-2T	800	500x660
FCU-2.5T	1000	559x660
FCU-3T	1200	559x660

NOTE:
A MIN. OF 125mm IS REQUIRED ON THE SIDE OF PIPE RISER.

DUCT SIZING TABLE
(4.06 m/s, 800 FPM)

DESIGNATION	L/s	DUCT SIZE	DESIGNATION	L/s	DUCT SIZE
A	47	100x150	G	189	350x150
B	71	150x150	H	236	450x150
C	94	200x150	J	283	500x150
D	118	200x150	K	330	600x150
E	141	250x150	L	377	500x200
F	165	300x150			

GENERAL NOTES:

1) CONTRACTOR SHALL CO-ORDINATE ARCHITECTURAL, STRUCTURAL, LIGHTING, HVAC, SPRINKLER DRAWINGS TO AVOID AREAS OF CONFLICT AND TO MAINTAIN CEILING HEIGHTS.

2) CONTRACTOR SHALL REPORT ALL DISCREPANCIES AND AREA OF CONFLICTS TO THE ENGINEER PRIOR TO WORK BEGINS.

3) PROVIDE EXPANSION CHAMBERS FOR ALL KITCHEN SINKS.

4) SEE INSTALLATION DETAILS DRAWING FOR WASHER DOM. H+C WATER, SANITARY CONNECTION DETAILS.

5) SUPPLY AND INSTALL COMPLETE DOMESTIC HOT AND COLD WATER LINES, SANITARY AND VENT LINES TO EACH FIXTURE /EQUIPMENT INCLUDING WATER CLOSETS, LAVATORIES, BATHS, SHOWERS, KITCHEN SINK, WASHING MACHINES, DISHWASHERS, AND FLOOR DRAINS. KITCHEN SINK, LAVATORIES, WATER CLOSETS AND WASHING MACHINE TO BE C/W LOCALIZED SHUT-OFF VALVES.

6) ALL VENT PIPE INSTALLATION TO COMPLY WITH PLUMBING CODES.

7) FOR D.H.C. W. RISER SIZES, REFER TO RISER DIAGRAM

8) FIRE DAMPERS ARE REQUIRED TO BE LISTED AND ARE TO HAVE FIRE PROTECTION RATING OF THE PENETRATED FIRE SEPARATION.

9) THE PIPING PENETRATING THE VARIOUS FIRE SEPARATION IS REQUIRED TO BE FIRESTOPPED WITH A LISTED FIRESTOPPING MATERIAL IN ACCORDANCE WITH OBC ARTICLE 3.1.9.1

10) THE FIRE HOSE CABINET THAT ARE RECESSED INTO THE EXIT STAIR SHAFTS ARE REQUIRED TO BE SEPARATED FROM THE EXIT STAIR BY A 2 HR. FIRE SEPARATION.

11) NO FLEXIBLE DUCT SHALL BE USED FOR ANY IN-SUITE DUCTWORK.

12) PROVIDE 25MM EXTERNAL INSULATION TO ENTIRE FRESH AIR DUCT FROM EXTERIOR WALL TO ERV FAN COIL UNIT.

13) DRYER EXHAUST DUCT SHALL BE SMOOTH AND CORROSION-RESISTANT MATERIAL (FLEXIBLE CONNECTION IS NOT ACCEPTABLE).

REFER TO DWG. M-X FOR ACOUSTIC NOTES

2590mm CLEAR FLOOR TO UNDERSLAB

NOTES:

1. NORTH F/A SHAFT SERVING FROM G/F TO 14/F. F/A DUCT SERVING CORRIDOR FROM G/F TO 14/F. SEE VENTILATION RISER DIAGRAM FOR DETAILS.
2. PIPE SHAFT - REFER TO PIPE RISER DETAIL ON THIS DRAWING FOR DETAILS.
3. 150ø KITCHEN / DRYER / W/R / FCU INTAKE / FCU EXHAUST DUCT. (TYPICAL UNLESS OTHERWISE NOTED)

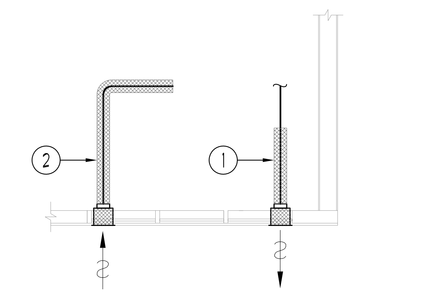

1. EXHAUST DUCTWORK TO BE C/W 1" THICK THERMAL INSULATION 6FT. FROM EXTERNAL WALL. (TYPICAL)
2. F/A INTAKE DUCTWORK TO BE C/W 1" THICK THERMAL INSULATION FOR ENTIRE LENGTH FROM EXTERIOR WALL TO ERV FCU. (TYPICAL)

TYPICAL DETAIL:INSULATION FOR INTAKE/EXHAUST DUCTWORK | NTS

LEGEND
MECHANICAL

SYMBOL	DESCRIPTION
	SUPPLY AIR DIFFUSER
	SUPPLY AIR TROFFER
	LINEAR SUPPLY DIFFUSER
T	THERMOSTAT
S	FAN SWITCH
	RETURN AIR GRILLE
	EXHAUST AIR GRILLE
	SUPPLY DUCT UP
	SUPPLY DUCT DOWN
	RETURN DUCT UP
	RETURN DUCT DOWN
	EXHAUST DUCT UP
	EXHAUST DUCT DOWN
FD	FIRE DAMPER
BD	BALANCING DAMPER
MD	MOTORIZED DAMPER
MFD	MOTORIZED FIRE DAMPER
BDD	BACKDRAFT DAMPER
OBD	OPPOSED BLADE VOLUME CONTROL DAMPER C/W LOCKING QUADRANT
	TURNING VANES
	FLEXIBLE CONNECTION
	ACOUSTIC INSULATION
	-TYPE OF EQUIPMENT -EQUIPMENT IDENTIFICATION
	-TYPE OF DIFFUSER OR GRILLE -GRILLE SIZE OR DIFFUSER NECK SIZE -AIRFLOW (CFM OR L/S)
	STARTER (3 PHASE , 1 PHASE)
	N-SUITE ERV MASTER SWITCH
	FAN SWITCH / N-SUITE ERV OVERRIDE BUTTON
	CO SENSOR
	GAS LINE
	GAS METER
	GAS COCK
	PRESSURE REDUCING VALVE
	SANITARY ABOVE GRADE
	SANITARY BELOW GRADE
	STORM ABOVE GRADE
	STORM BELOW GRADE
	DOMESTIC COLD WATER
	DOMESTIC HOT WATER
	DOMESTIC HOT WATER RECIRCULATION
	SANITARY VENT
	WATER METER
FD	FLOOR DRAIN
FFD	FUNNEL FLOOR DRAIN
HD	HUB DRAIN
RD	ROOF DRAIN
BLD	BLAB DRAIN
AD	AREA DRAIN
BL-AD	BI-LEVEL AREA DRAIN
CB	CATCH BASIN
	SANITARY TRAP
	ELBOW UP
	ELBOW DOWN
CO	WALL CLEANOUT
CO	FLOOR CLEANOUT
HB	HOSE BIBB
NFHB	NON-FREEZE HOSE BIBB
	GLOBE VALVE
	GATE VALVE
	BALL VALVE
	BUTTERFLY VALVE
	PRESSURE REDUCING VALVE
	CHECK VALVE
	CAP
	COMPRESSED AIR OUTLET
NV	BACKFLOW PREVENTER
	CIRCUIT BALANCING VALVE
	MULTIPLE PIPES / - DENOTES NO. OF PIPES
T	TEMPERATURE SENSOR
T	THERMOMETER
	2-WAY MODULATING VALVE
	3-WAY MODULATING VALVE
	1/2"x4 1/2" THERMOWELL C/W 1/2" BUSHING x 1/2" PLUG
	-FLOOR ELEVATION ABOVE LEVEL -FLOOR ELEVATION THIS LEVEL -HEADROOM (FLOOR TO U/S HEIGHT)

PRIORITY	1	ISSUED FOR ---	E.P.
DATE	NO.	DESCRIPTION	BY

MARK VOID ALL PRINTS DATED PREVIOUS TO FINAL DATE ABOVE

REVISIONS

CONTRACTOR MUST CHECK AND VERIFY ALL DIMENSIONS AND CONDITIONS ON THE JOB AND REPORT DISCREPANCIES TO THE ENGINEERS BEFORE PROCEEDING WITH THE WORK. THIS DRAWING IS THE PROPERTY OF THE ENGINEERS AND MUST BE RETURNED UPON COMPLETION OF THE WORK.

DRAWINGS ARE NOT TO BE SCALED

NOVA TREND ENGINEERING GROUP LTD.
179 West Beaver Creek Road, Unit 31
Richmond Hill, Ontario L4B 3M1
Tel: 905 882-5445
Fax: 905 882-5447
Email: cad@novatrendeng.com

DRAWING TITLE
3/F NORTH
MECHANICAL LAYOUT

PROJECT TITLE
ALEXANDRA PARK

XXX
TORONTO ONTARIO

DRAWN BY:	CHECKED BY:	SCALE:
G.S.	E.P.	1:50
DATE: FEB. 13	PROJECT NUMBER: 1313	DRAWING NUMBER: M-15 of 35

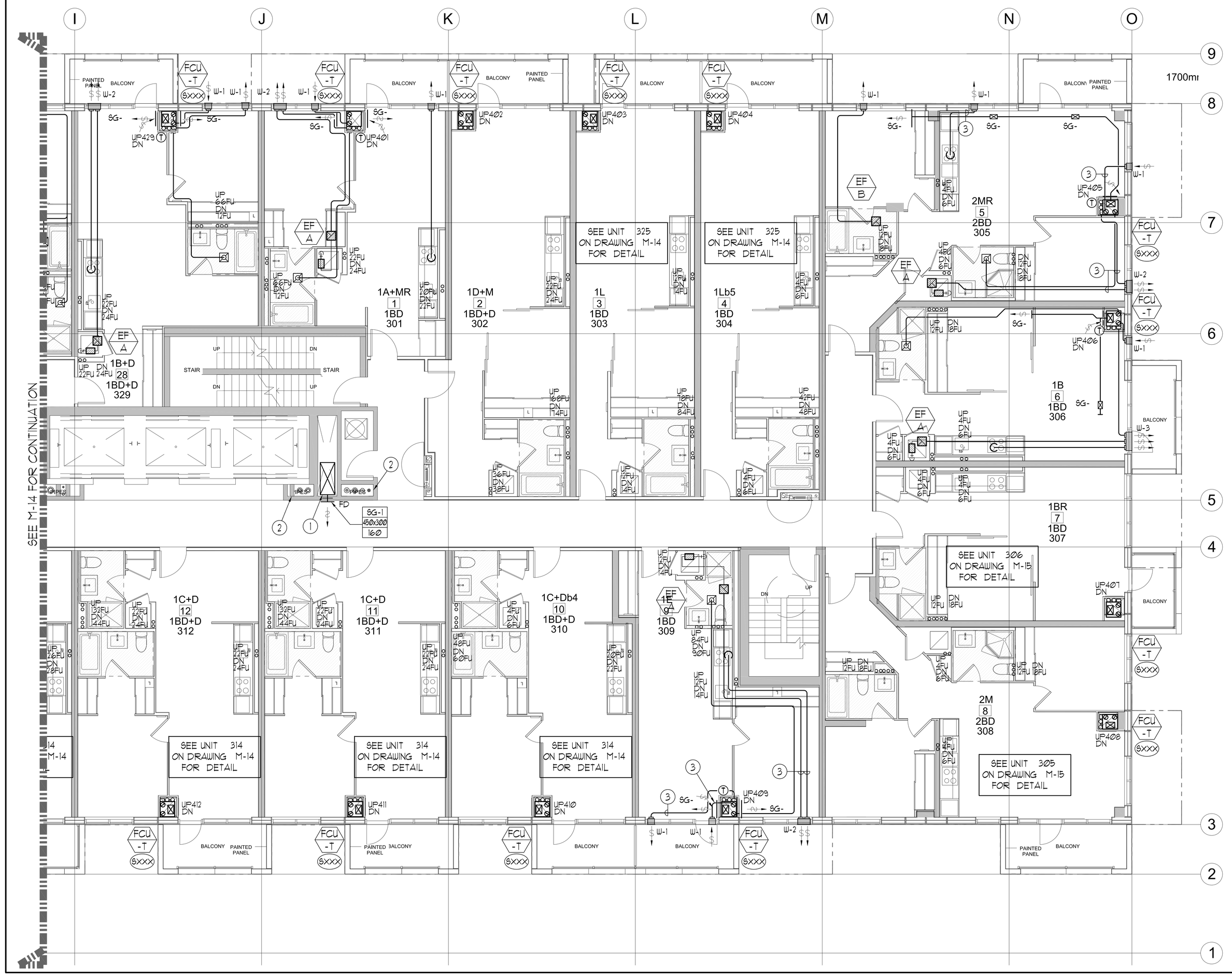

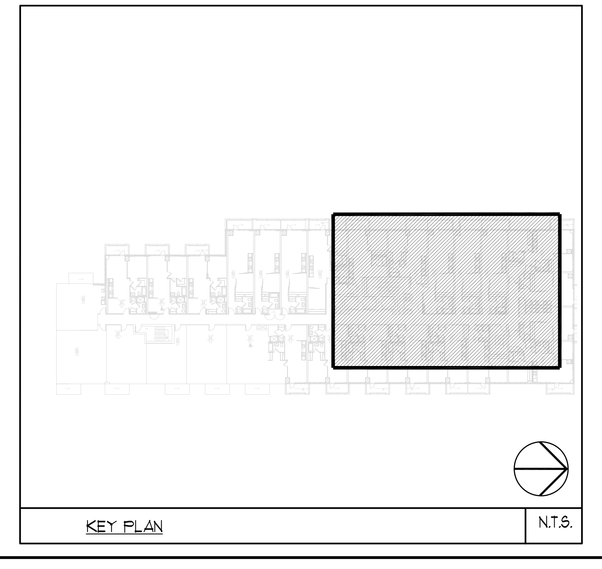

KEY PLAN | N.T.S.

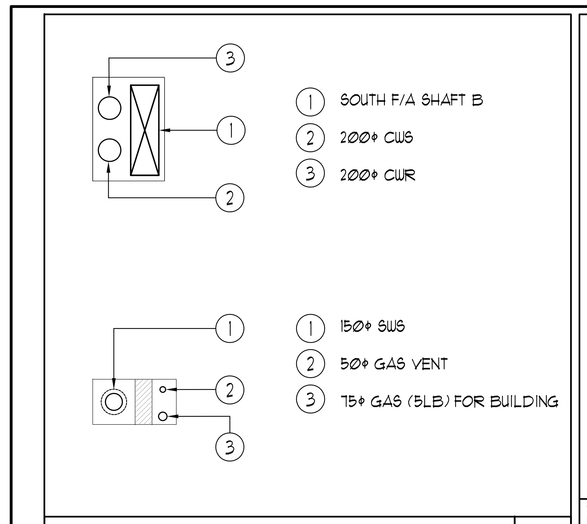

SOUTH PIPE SHAFT: 2/F -T/F. NTS

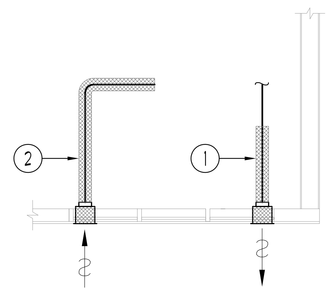

1. EXHAUST DUCTWORK TO BE C/W 1" THICK THERMAL INSULATION 6FT. FROM EXTERNAL WALL. (TYPICAL)
2. F/A INTAKE DUCTWORK TO BE C/W 1" THICK THERMAL INSULATION FOR ENTIRE LENGTH FROM EXTERIOR WALL TO ERV FCU. (TYPICAL)

TYPICAL DETAIL: INSULATION FOR INTAKE & EXHAUT DUCTWORK NTS

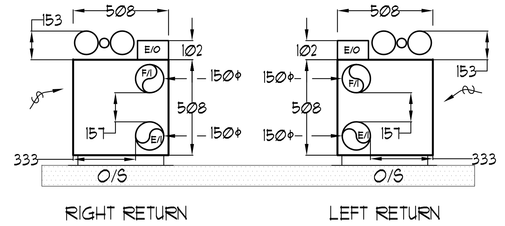

NOTE:
- ALL DIMENSIONS IN MM.
- HEIGHT OF FCU IS 2,073.

INSUITE FCU DIMENSIONS NTS

UNIT	NAME	AREA (SQ. FT.)	# OF WR	# OF POWDER	SIZE (T)	FIXTURE UNITS	BR	SQ. FT./T

GRILLE SIZING TABLE		
DESIGNATION	SIZE	L/S (UNLESS SPECIFIED ELSEWHERE)
SG-A	300x100	47-70
SG-B	300x150	71-93
SG-C	400x150	94-140
SG-D	450x150	141-188
EG-A	150x150	35
W-1	225x200	210mm(L)
W-2	425x200	INSULATED
W-3	625x200	WALL BOX

VERTICAL FAN COIL SIZE		
DESIGNATION	MODEL	W x D
FCU-1T	450	508x660
FCU-1.5T	600	508x660
FCU-2T	800	508x660
FCU-2.5T	1000	559x660
FCU-3T	1200	559x660

NOTE:
A MIN. OF 125mm IS REQUIRED ON THE SIDE OF PIPE RISER.

DUCT SIZING TABLE (4.06 m/s, 800 FPM)					
DESIGNATION	L/s	DUCT SIZE	DESIGNATION	L/s	DUCT SIZE
A	47	100x150	G	189	350x150
B	71	150x150	H	236	450x150
C	94	200x150	J	283	500x150
D	118	200x150	K	330	600x150
E	141	250x150	L	377	500x200
F	165	300x150			

GENERAL NOTES:

1) CONTRACTOR SHALL CO-ORDINATE ARCHITECTURAL, STRUCTURAL, LIGHTING, HVAC, SPRINKLER DRAWINGS TO AVOID AREAS OF CONFLICT AND TO MAINTAIN CEILING HEIGHTS.

2) CONTRACTOR SHALL REPORT ALL DISCREPANCIES AND AREA OF CONFLICTS TO THE ENGINEER PRIOR TO WORK BEGINS.

3) PROVIDE EXPANSION CHAMBERS FOR ALL KITCHEN SINKS.

4) SEE INSTALLATION DETAILS DRAWING FOR WASHER DOM. H+C WATER, SANITARY CONNECTION DETAILS.

5) SUPPLY AND INSTALL COMPLETE DOMESTIC HOT AND COLD WATER LINES, SANITARY AND VENT LINES TO EACH FIXTURE /EQUIPMENT INCLUDING WATER CLOSETS, LAVATORIES, BATHS, SHOWERS, KITCHEN SINK, WASHING MACHINES, DISHWASHERS, AND FLOOR DRAINS. KITCHEN SINK, LAVATORIES, WATER CLOSETS AND WASHING MACHINE TO BE C/W LOCALIZED SHUT-OFF VALVES.

6) ALL VENT PIPE INSTALLATION TO COMPLY WITH PLUMBING CODES.

7) FOR D.H.C. W. RISER SIZES, REFER TO RISER DIAGRAM

8) FIRE DAMPERS ARE REQUIRED TO BE LISTED AND ARE TO HAVE FIRE PROTECTION RATING OF THE PENETRATED FIRE SEPARATION.

9) THE PIPING PENETRATING THE VARIOUS FIRE SEPARATION IS REQUIRED TO BE FIRESTOPPED WITH A LISTED FIRESTOPPING MATERIAL IN ACCORDANCE WITH OBC ARTICLE 3.1.9.)

10) THE FIRE HOSE CABINET THAT ARE RECESSED INTO THE EXIT STAIR SHAFTS ARE REQUIRED TO BE SEPARATED FROM THE EXIT STAIR BY A 2 HR. FIRE SEPARATION.

11) NO FLEXIBLE DUCT SHALL BE USED FOR ANY IN-SUITE DUCTWORK.

12) PROVIDE 25MM EXTERNAL INSULATION TO ENTIRE FRESH AIR DUCT FROM EXTERIOR WALL TO ERV FAN COIL UNIT.

13) DRYER EXHAUST DUCT SHALL BE SMOOTH AND CORROSION-RESISTANT MATERIAL (FLEXIBLE CONNECTION IS NOT ACCEPTABLE).

REFER TO DWG. M-X FOR ACOUSTIC NOTES

⚠ 2590mm CLEAR FLOOR TO UNDERSLAB

NOTES:

1. SOUTH F/A SHAFT A FROM G/F TO B/F DUCT SERVING CORRIDOR FROM G/F TO B/F. SEE VENTILATION RISER DIAGRAM FOR DETAILS.
2. SOUTH F/A SHAFT B FROM G/F TO 14/F. F/A DUCT SERVING CORRIDOR FROM 9/F TO 14/F. SEE VENTILATION RISER DIAGRAM FOR DETAILS.
3. PIPE SHAFT - REFER TO PIPE RISER DETAIL ON THIS DRAWING FOR DETAILS.
4. 150ø KITCHEN / DRYER / W/R / FCU INTAKE / FCU EXHAUST DUCT. (TYPICAL UNLESS OTHERWISE NOTED)

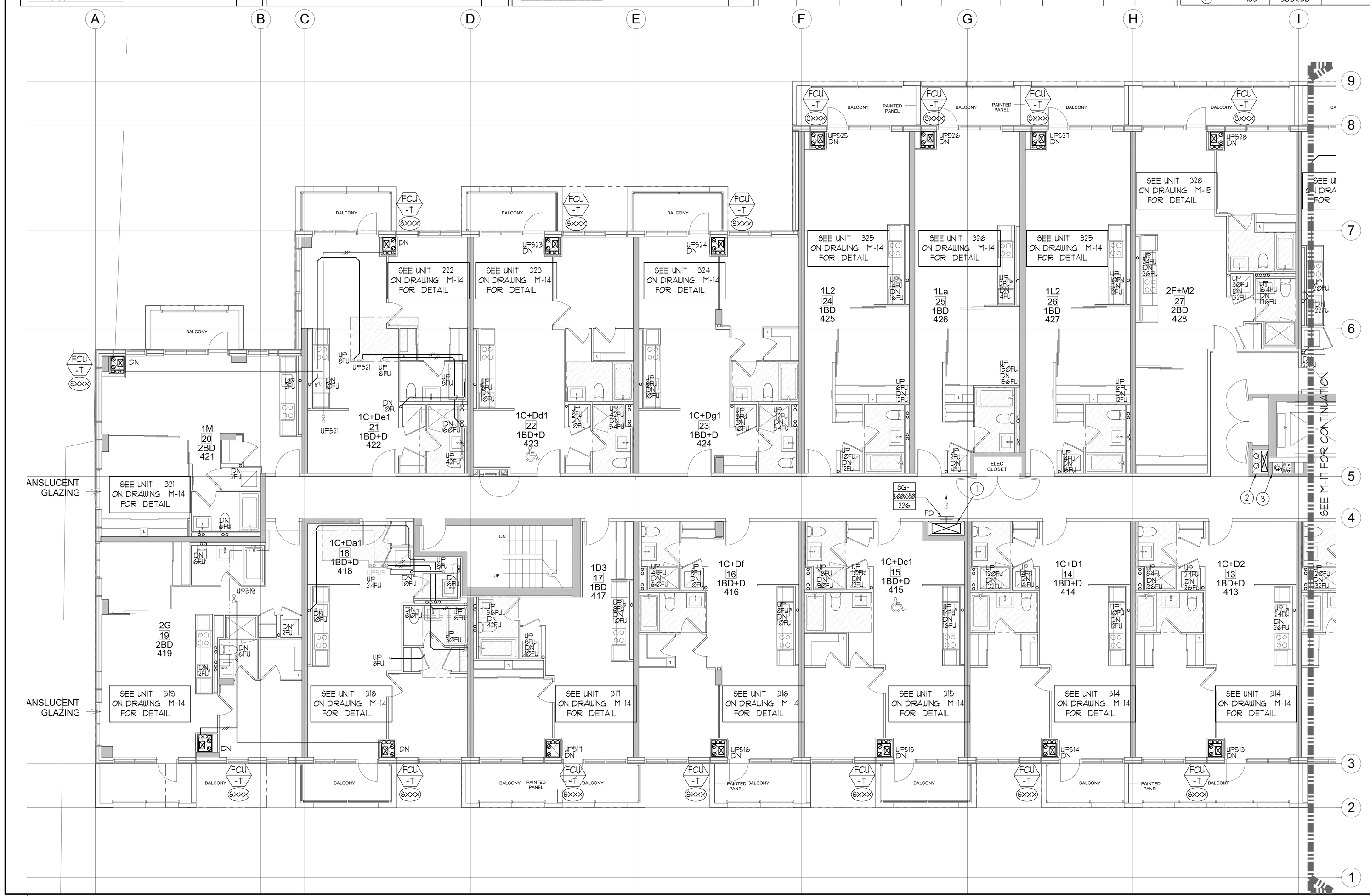

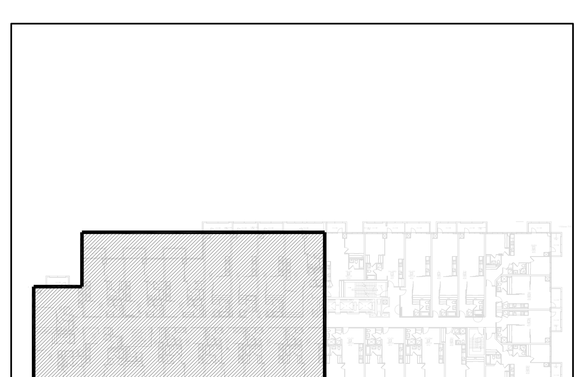

KEY PLAN N.T.S.

LEGEND MECHANICAL

SYMBOL	DESCRIPTION
	SUPPLY AIR DIFFUSER
	SUPPLY AIR TROFFER
	LINEAR SUPPLY DIFFUSER
T	THERMOSTAT
S	FAN SWITCH
	RETURN AIR GRILLE
	EXHAUST AIR GRILLE
	SUPPLY DUCT UP
	SUPPLY DUCT DOWN
	RETURN DUCT UP
	RETURN DUCT DOWN
	EXHAUST DUCT UP
	EXHAUST DUCT DOWN
FD	FIRE DAMPER
BD	BALANCING DAMPER
MD	MOTORIZED DAMPER
MFD	MOTORIZED FIRE DAMPER
BDD	BACKDRAFT DAMPER
OBD	OPPOSED BLADE VOLUME CONTROL DAMPER C/W LOCKING QUADRANT
	TURNING VANES
	FLEXIBLE CONNECTION
	ACOUSTIC INSULATION
XX	TYPE OF EQUIPMENT EQUIPMENT IDENTIFICATION
XXX	TYPE OF DIFFUSER OR GRILLE
XXX	GRILLE SIZE OR DIFFUSER NECK SIZE
XXX	AIRFLOW (CFM OR L/S)
	STARTER / 3 PHASE / 1 PHASE /
S	IN-SUITE ERV MASTER SWITCH
S	FAN SWITCH / IN-SUITE ERV OVERRIDE BUTTON
CO	CO SENSOR
G	GAS LINE
G	GAS METER
G	GAS COCK
PR	PRESSURE REDUCING VALVE
	SANITARY ABOVE GRADE
	SANITARY BELOW GRADE
	STORM ABOVE GRADE
	STORM BELOW GRADE
	DOMESTIC COLD WATER
	DOMESTIC HOT WATER
	DOMESTIC HOT WATER RECIRCULATION
	SANITARY VENT
	WATER METER
FD	FLOOR DRAIN
FFD	FUNNEL FLOOR DRAIN
HD	HUB DRAIN
RD	ROOF DRAIN
BLD	SLAB DRAIN
AD	AREA DRAIN
BLAD	BI-LEVEL AREA DRAIN
CB	CATCH BASIN
	SANITARY TRAP
	ELBOW UP
	ELBOW DOWN
CO	WALL CLEANOUT
CO	FLOOR CLEANOUT
HB	HOSE BIBB
NFHB	NON-FREEZE HOSE BIBB
	GLOBE VALVE
	GATE VALVE
	BALL VALVE
	BUTTERFLY VALVE
	PRESSURE REDUCING VALVE
	CHECK VALVE
	CAP
CA	COMPRESSED AIR OUTLET
NN	BACKFLOW PREVENTER
	CIRCUIT BALANCING VALVE
	MULTIPLE PIPES / - DENOTES NO. OF PIPES
T	TEMPERATURE SENSOR
T	THERMOMETER
	2-WAY MODULATING VALVE
	3-WAY MODULATING VALVE
	10"x4"(D) THERMOWELL C/W 1/2" BUSHING x 1/2" PLUG
XXX	FLOOR ELEVATION ABOVE LEVEL
XXX	FLOOR ELEVATION THIS LEVEL
XXX	HEADROOM (FLOOR TO U/S HEIGHT)

TYP/DD/YY		ISSUED FOR: ---		E.P.
DATE	NO.	DESCRIPTION		BY

MARK VOID ALL PRINTS DATED PREVIOUS TO FINAL DATE ABOVE

REVISIONS

CONTRACTOR MUST CHECK AND VERIFY ALL DIMENSIONS AND CONDITIONS ON THE JOB AND REPORT DISCREPANCIES TO THE ENGINEERS BEFORE PROCEEDING WITH THE WORK. THIS DRAWING IS THE PROPERTY OF THE ENGINEERS AND MUST BE RETURNED UPON COMPLETION OF THE WORK.

DRAWINGS ARE NOT TO BE SCALED

NOVA TREND ENGINEERING SERVICES

119 West Beaver Creek Road, Unit 31
Richmond Hill, Ontario L4B 3M1
Tel: 905 882-5445
Fax: 905 882-5447
Email: cad@novatrendeng.com

DRAWING TITLE:
4/F SOUTH
MECHANICAL LAYOUT

PROJECT TITLE:
ALEXANDRA PARK

XXX
TORONTO ONTARIO

DRAWN BY:	CHECKED BY:	SCALE:
G.S.	E.P.	1:50
DATE: FEB. 13	PROJECT NUMBER: 1313	DRAWING NUMBER: M-16 OF 35

Drawing name: \\CADSERVER\Current Dwg\1313\1313 - Alexandra Park\DWG\1313M-16.17 4/F PLAN - SOUTHS NORTH MECHANICAL LAYOUT.dwg Plotted: Mar 12, 2014 - 3:41pm

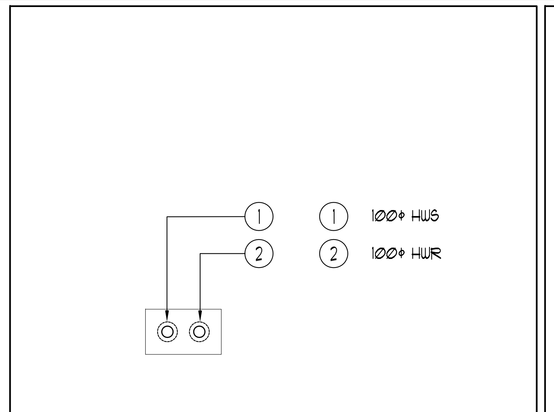

NORTH PIPE SHAFT A: 2/F -T/F. NTS

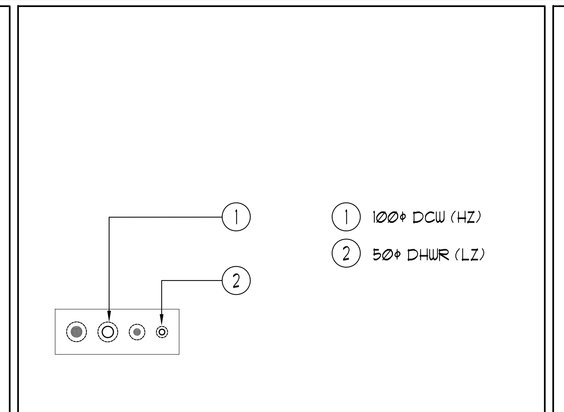

NORTH PIPE SHAFT B: 2/F -T/F NTS

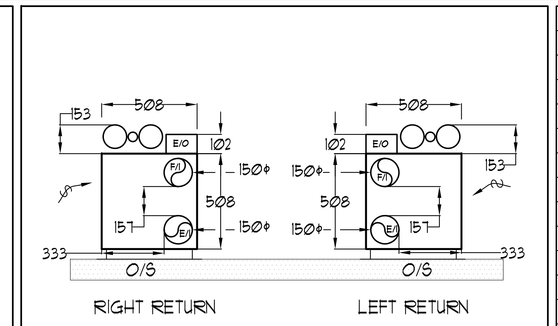

NOTE:
- ALL DIMENSIONS IN MM.
- HEIGHT OF FCU IS 2,023.

INSUITE FCU DIMENSIONS NTS

UNIT	NAME	AREA (SQ. FT.)	# OF WR	# OF POWDER	SIZE (T)	FIXTURE UNITS	BR	SQ. FT/T

GRILLE SIZING TABLE

DESIGNATION	SIZE	L/S (UNLESS SPECIFIED ELSEWHERE)
SG-A	300x100	47-70
SG-B	300x150	71-93
SG-C	400x150	94-140
SG-D	450x150	141-188
EG-A	150x150	35
W-1	225x200	210mm(L)
W-2	425x200	INSULATED
W-3	625x200	WALL BOX

VERTICAL FAN COIL SIZE

DESIGNATION	MODEL	W x D
FCU-1T	450	500x660
FCU-1.5T	600	500x660
FCU-2T	800	500x660
FCU-2.5T	1000	559x660
FCU-3T	1200	559x660

NOTE:
A MIN. OF 125mm IS REQUIRED ON THE SIDE OF PIPE RISER.

DUCT SIZING TABLE
(4.06 m/s, 800 FPM)

DESIGNATION	L/s	DUCT SIZE	DESIGNATION	L/s	DUCT SIZE
A	47	100x150	G	189	350x150
B	71	150x150	H	236	450x150
C	94	200x150	J	283	500x150
D	118	200x150	K	330	600x150
E	141	250x150	L	377	500x200
F	165	300x150			

GENERAL NOTES:

1) CONTRACTOR SHALL CO-ORDINATE ARCHITECTURAL, STRUCTURAL, LIGHTING, HVAC, SPRINKLER DRAWINGS TO AVOID AREAS OF CONFLICT AND TO MAINTAIN CEILING HEIGHTS.

2) CONTRACTOR SHALL REPORT ALL DISCREPANCIES AND AREA OF CONFLICTS TO THE ENGINEER PRIOR TO WORK BEGINS.

3) PROVIDE EXPANSION CHAMBERS FOR ALL KITCHEN SINKS.

4) SEE INSTALLATION DETAILS DRAWING FOR WASHER DOM. H+C WATER, SANITARY CONNECTION DETAILS.

5) SUPPLY AND INSTALL COMPLETE DOMESTIC HOT AND COLD WATER LINES, SANITARY AND VENT LINES TO EACH FIXTURE /EQUIPMENT INCLUDING WATER CLOSETS, LAVATORIES, BATHS, SHOWERS, KITCHEN SINK, WASHING MACHINES, DISHWASHERS, AND FLOOR DRAINS. KITCHEN SINK, LAVATORIES, WATER CLOSETS AND WASHING MACHINE TO BE C/W LOCALIZED SHUT-OFF VALVES.

6) ALL VENT PIPE INSTALLATION TO COMPLY WITH PLUMBING CODES.

7) FOR D.H.C. W. RISER SIZES, REFER TO RISER DIAGRAM

8) FIRE DAMPERS ARE REQUIRED TO BE LISTED AND ARE TO HAVE FIRE PROTECTION RATING OF THE PENETRATED FIRE SEPARATION.

9) THE PIPING PENETRATING THE VARIOUS FIRE SEPARATION IS REQUIRED TO BE FIRESTOPPED WITH A LISTED FIRESTOPPING MATERIAL IN ACCORDANCE WITH OBC ARTICLE 3.1.9.1

10) THE FIRE HOSE CABINET THAT ARE RECESSED INTO THE EXIT STAIR SHAFTS ARE REQUIRED TO BE SEPARATED FROM THE EXIT STAIR BY A 2 HR. FIRE SEPARATION.

11) NO FLEXIBLE DUCT SHALL BE USED FOR ANY IN-SUITE DUCTWORK.

12) PROVIDE 25MM EXTERNAL INSULATION TO ENTIRE FRESH AIR DUCT FROM EXTERIOR WALL TO ERV FAN COIL UNIT.

13) DRYER EXHAUST DUCT SHALL BE SMOOTH AND CORROSION-RESISTANT MATERIAL (FLEXIBLE CONNECTION IS NOT ACCEPTABLE).

REFER TO DWG. M-X FOR ACOUSTIC NOTES

△ 2590mm CLEAR FLOOR TO UNDERSLAB

NOTES:

1. NORTH F/A SHAFT SERVING FROM G/F TO 14/F. F/A DUCT SERVING CORRIDOR FROM G/F TO 14/F. SEE VENTILATION RISER DIAGRAM FOR DETAILS.
2. PIPE SHAFT - REFER TO PIPE RISER DETAIL ON THIS DRAWING FOR DETAILS.
3. 150ø KITCHEN / DRYER / W/R / FCU INTAKE / FCU EXHAUST DUCT. (TYPICAL UNLESS OTHERWISE NOTED)

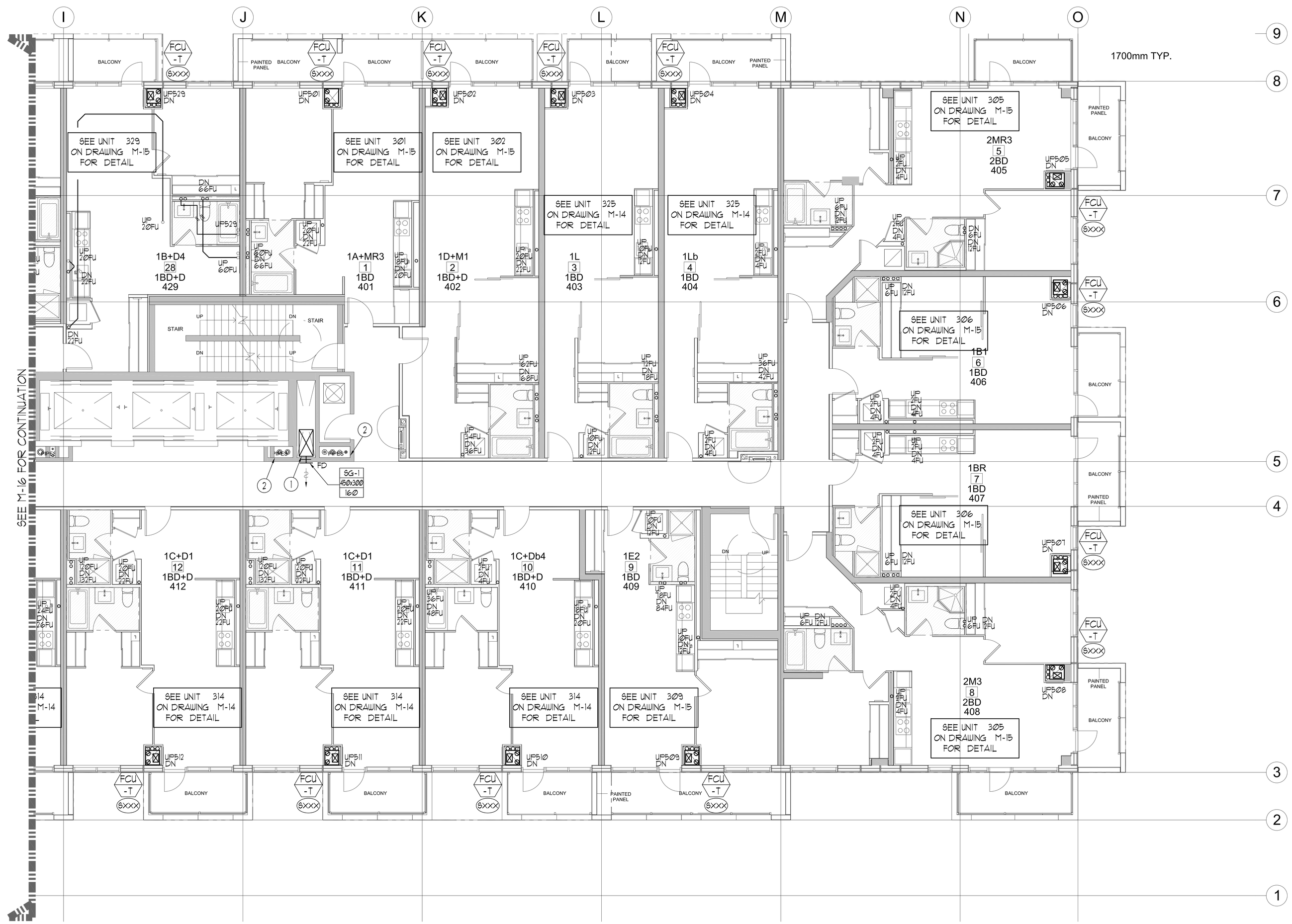

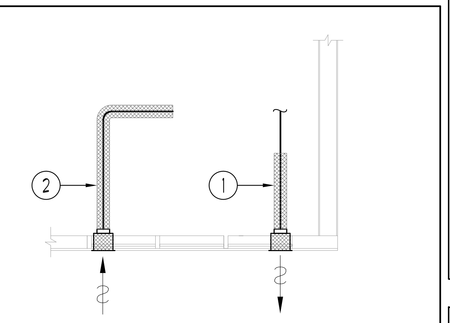

1. EXHAUST DUCTWORK TO BE C/W 1" THICK THERMAL INSULATION 6FT. FROM EXTERNAL WALL. (TYPICAL)
2. F/A INTAKE DUCTWORK TO BE C/W 1" THICK THERMAL INSULATION FOR ENTIRE LENGTH FROM EXTERIOR WALL TO ERV FCU. (TYPICAL)

TYPICAL DETAIL: INSULATION FOR INTAKE/EXHAUST DUCTWORK NTS

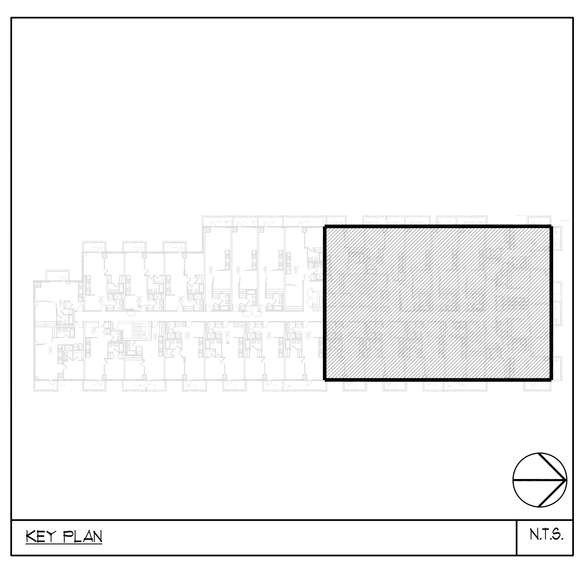

KEY PLAN N.T.S.

LEGEND MECHANICAL

SYMBOL	DESCRIPTION
	SUPPLY AIR DIFFUSER
	SUPPLY AIR TROFFER
	LINEAR SUPPLY DIFFUSER
T	THERMOSTAT
S	FAN SWITCH
	RETURN AIR GRILLE
	EXHAUST AIR GRILLE
	SUPPLY DUCT UP
	SUPPLY DUCT DOWN
	RETURN DUCT UP
	RETURN DUCT DOWN
	EXHAUST DUCT UP
	EXHAUST DUCT DOWN
FD	FIRE DAMPER
BD	BALANCING DAMPER
MD	MOTORIZED DAMPER
MFD	MOTORIZED FIRE DAMPER
BDD	BACKDRAFT DAMPER
OBD	OPPOSED BLADE VOLUME CONTROL DAMPER C/W LOCKING QUADRANT
	TURNING VANES
	FLEXIBLE CONNECTION
	ACOUSTIC INSULATION
	TYPE OF EQUIPMENT EQUIPMENT IDENTIFICATION
	TYPE OF DIFFUSER OR GRILLE GRILLE SIZE OR DIFFUSER NECK SIZE AIRFLOW CFM OR L/S
	STARTER / 3 PHASE / PHASE /
S	IN-SUITE ERV MASTER SWITCH
S	FAN SWITCH / IN-SUITE ERV OVERRIDE BUTTON
CO	CO SENSOR
G	GAS LINE
G	GAS METER
	GAS COCK
PRV	PRESSURE REDUCING VALVE
	SANITARY ABOVE GRADE
	SANITARY BELOW GRADE
	STORM ABOVE GRADE
	STORM BELOW GRADE
	DOMESTIC COLD WATER
	DOMESTIC HOT WATER
	DOMESTIC HOT WATER RECIRCULATION
V	SANITARY VENT
W	WATER METER
FD	FLOOR DRAIN
FFD	FUNNEL FLOOR DRAIN
HD	HUB DRAIN
RD	ROOF DRAIN
BLD	BLAB DRAIN
AD	AREA DRAIN
BLAD	BI-LEVEL AREA DRAIN
CB	CATCH BASIN
	SANITARY TRAP
	ELBOW UP
	ELBOW DOWN
CO	WALL CLEANOUT
CO	FLOOR CLEANOUT
HB	HOSE BIBB
NHB	NON-FREEZE HOSE BIBB
	GLOBE VALVE
	GATE VALVE
	BALL VALVE
	BUTTERFLY VALVE
	PRESSURE REDUCING VALVE
	CHECK VALVE
	CAP
	COMPRESSED AIR OUTLET
	BACKFLOW PREVENTER
	CIRCUIT BALANCING VALVE
	MULTIPLE PIPES / - DENOTES NO. OF PIPES
T	TEMPERATURE SENSOR
T	THERMOMETER
	2-WAY MODULATING VALVE
	3-WAY MODULATING VALVE
	1/2"x4"(1) THERMOWELL C/W 1/2" BUSHING x 1/2" PLUG
XXXX	FLOOR ELEVATION ABOVE LEVEL
XXXX	FLOOR ELEVATION THIS LEVEL
XXXX	HEADROOM (FLOOR TO U/S HEIGHT)

YR/DD/TT		ISSUED FOR ---	E.P.
DATE	NO	DESCRIPTION	BY

MARK VOID ALL PRINTS DATED PREVIOUS TO FINAL DATE ABOVE

REVISIONS

CONTRACTOR MUST CHECK AND VERIFY ALL DIMENSIONS AND CONDITIONS ON THE JOB AND REPORT DISCREPANCIES TO THE ENGINEERS BEFORE PROCEEDING WITH THE WORK. THIS DRAWING IS THE PROPERTY OF THE ENGINEERS AND MUST BE RETURNED UPON COMPLETION OF THE WORK.

DRAWINGS ARE NOT TO BE SCALED

NOVA TREND ENGINEERING GROUP LTD.
179 West Beaver Creek Road, Unit 31
Richmond Hill, Ontario L4B 3M1
Tel: 905 882-5445
Fax: 905 882-5447
Email: cad@novatrendeng.com

DRAWING TITLE:
4/F NORTH
MECHANICAL LAYOUT

PROJECT TITLE:
ALEXANDRA PARK

XXX
TORONTO ONTARIO

DRAWN BY:	CHECKED BY:	SCALE:
G.S.	E.P.	1:50
DATE: FEB. 13	PROJECT NUMBER: 1313	DRAWING NUMBER: M-17 OF 39

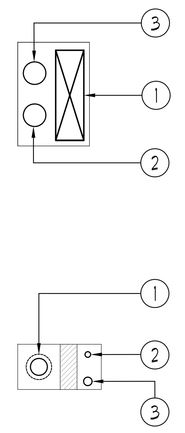

SOUTH PIPE SHAFT: 2/F -T/F. NTS

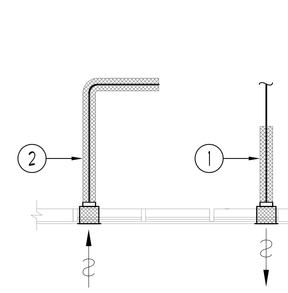

1. EXHAUST DUCTWORK TO BE C/W 1" THICK THERMAL INSULATION 6FT. FROM EXTERNAL WALL. (TYPICAL)
2. F/A INTAKE DUCTWORK TO BE C/W 1" THICK THERMAL INSULATION FOR ENTIRE LENGTH FROM EXTERIOR WALL TO ERV FCU. (TYPICAL)

TYPICAL DETAIL: INSULATION FOR INTAKE & EXHAUST DUCTWORK NTS

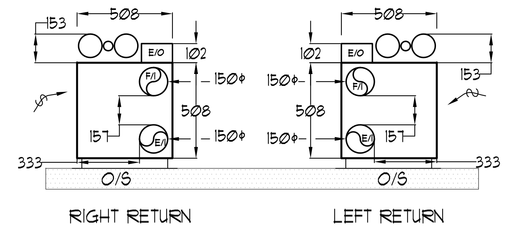

NOTE:
- ALL DIMENSIONS IN MM.
- HEIGHT OF FCU IS 2,023.

INSUITE FCU DIMENSIONS NTS

UNIT	NAME	AREA (SQ. FT.)	# OF WR	# OF POWDER	SIZE (T)	FIXTURE UNITS	BR	SQ. FT/T

GRILLE SIZING TABLE

DESIGNATION	SIZE	L/s (UNLESS SPECIFIED ELSEWHERE)
SG-A	300x100	47-70
SG-B	300x150	71-93
SG-C	400x150	94-140
SG-D	450x150	141-188
EG-A	150x150	35
W-1	225x200	210mm(L)
W-2	425x200	INSULATED
W-3	625x200	WALL BOX

VERTICAL FAN COIL SIZE

DESIGNATION	MODEL	W x D
FCU-1T	450	500x660
FCU-1.5T	600	500x660
FCU-2T	800	500x660
FCU-2.5T	1000	550x660
FCU-3T	1200	550x660

NOTE:
A MIN. OF 125mm IS REQUIRED ON THE SIDE OF PIPE RISER.

DUCT SIZING TABLE
(4.06 m/s, 800 FPM)

DESIGNATION	L/s	DUCT SIZE	DESIGNATION	L/s	DUCT SIZE
A	47	100x150	G	189	350x150
B	71	150x150	H	236	450x150
C	94	200x150	J	283	500x150
D	118	200x150	K	330	600x150
E	141	250x150	L	377	500x200
F	165	300x150			

GENERAL NOTES:

1) CONTRACTOR SHALL CO-ORDINATE ARCHITECTURAL, STRUCTURAL, LIGHTING, HVAC, SPRINKLER DRAWINGS TO AVOID AREAS OF CONFLICT AND TO MAINTAIN CEILING HEIGHTS.
2) CONTRACTOR SHALL REPORT ALL DISCREPANCIES AND AREA OF CONFLICTS TO THE ENGINEER PRIOR TO WORK BEGINS.
3) PROVIDE EXPANSION CHAMBERS FOR ALL KITCHEN SINKS.
4) SEE INSTALLATION DETAILS DRAWING FOR WASHER DOM. H+C WATER, SANITARY CONNECTION DETAILS.
5) SUPPLY AND INSTALL COMPLETE DOMESTIC HOT AND COLD WATER LINES, SANITARY AND VENT LINES TO EACH FIXTURE /EQUIPMENT INCLUDING WATER CLOSETS, LAVATORIES, BATHS, SHOWERS, KITCHEN SINK, WASHING MACHINES, DISHWASHERS, AND FLOOR DRAINS. KITCHEN SINK, LAVATORIES, WATER CLOSETS AND WASHING MACHINE TO BE C/W LOCALIZED SHUT-OFF VALVES.
6) ALL VENT PIPE INSTALLATION TO COMPLY WITH PLUMBING CODES.
7) FOR D.H.C. W. RISER SIZES, REFER TO RISER DIAGRAM
8) FIRE DAMPERS ARE REQUIRED TO BE LISTED AND ARE TO HAVE FIRE PROTECTION RATING OF THE PENETRATED FIRE SEPARATION.
9) THE PIPING PENETRATING THE VARIOUS FIRE SEPARATION IS REQUIRED TO BE FIRESTOPPED WITH A LISTED FIRESTOPPING MATERIAL IN ACCORDANCE WITH OBC ARTICLE 3.1.9.)
10) THE FIRE HOSE CABINET THAT ARE RECESSED INTO THE EXIT STAIR SHAFTS ARE REQUIRED TO BE SEPARATED FROM THE EXIT STAIR BY A 2 HR. FIRE SEPARATION.
11) NO FLEXIBLE DUCT SHALL BE USED FOR ANY IN-SUITE DUCTWORK.
12) PROVIDE 25MM EXTERNAL INSULATION TO ENTIRE FRESH AIR DUCT FROM EXTERIOR WALL TO ERV FAN COIL UNIT.
13) DRYER EXHAUST DUCT SHALL BE SMOOTH AND CORROSION-RESISTANT MATERIAL (FLEXIBLE CONNECTION IS NOT ACCEPTABLE).

REFER TO DWG. M-X FOR ACOUSTIC NOTES

⚠ 2850mm CLEAR FLOOR TO UNDERSLAB

NOTES:

1. SOUTH F/A SHAFT A FROM G/F TO 8/F DUCT SERVING CORRIDOR FROM G/F TO 8/F. SEE VENTILATION RISER DIAGRAM FOR DETAILS.
2. SOUTH F/A SHAFT B FROM G/F TO 14/F. F/A DUCT SERVING CORRIDOR FROM 9/F TO 14/F. SEE VENTILATION RISER DIAGRAM FOR DETAILS.
3. PIPE SHAFT - REFER TO PIPE RISER DETAIL ON THIS DRAWING FOR DETAILS.
4. 150ø KITCHEN / DRYER / W/R / FCU INTAKE / FCU EXHAUST DUCT. (TYPICAL UNLESS OTHERWISE NOTED)

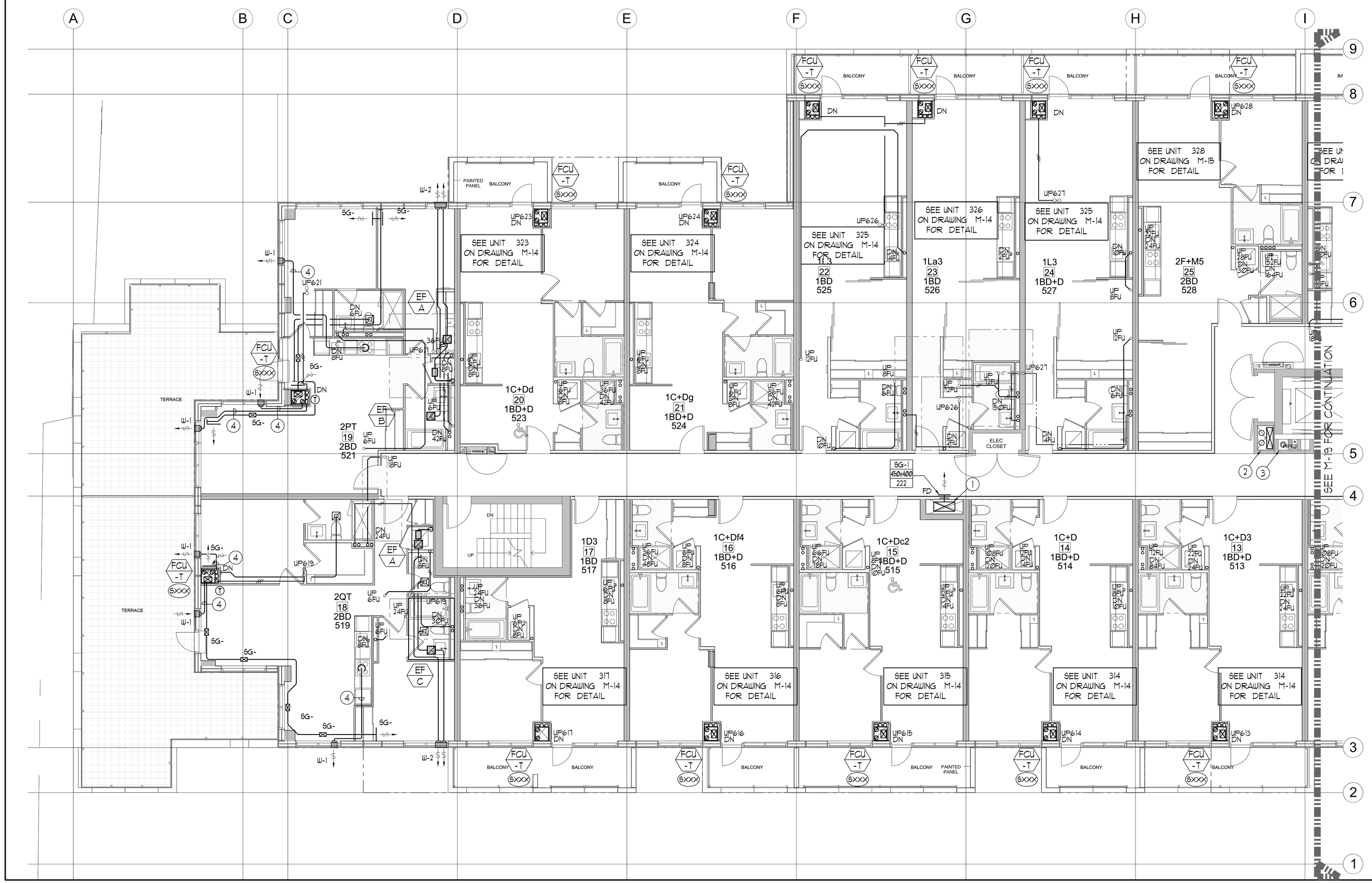

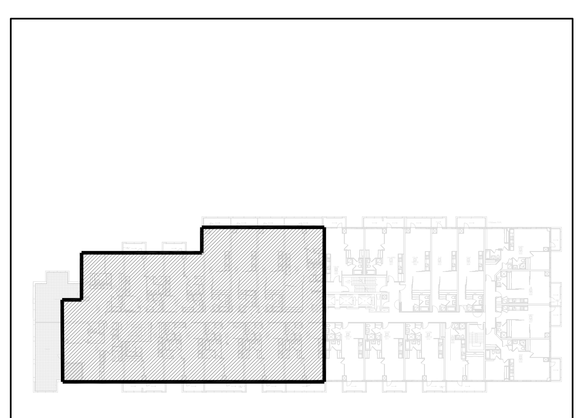

KEY PLAN N.T.S.

LEGEND MECHANICAL

SYMBOL	DESCRIPTION
	SUPPLY AIR DIFFUSER
	SUPPLY AIR TROFFER
	LINEAR SUPPLY DIFFUSER
T	THERMOSTAT
S	FAN SWITCH
	RETURN AIR GRILLE
	EXHAUST AIR GRILLE
	SUPPLY DUCT UP
	SUPPLY DUCT DOWN
	RETURN DUCT UP
	RETURN DUCT DOWN
	EXHAUST DUCT UP
	EXHAUST DUCT DOWN
FD	FIRE DAMPER
BD	BALANCING DAMPER
MD	MOTORIZED DAMPER
MFD	MOTORIZED FIRE DAMPER
BDD	BACKDRAFT DAMPER
OBD	OPPOSED BLADE VOLUME CONTROL DAMPER C/W LOCKING QUADRANT
	TURNING VANES
	FLEXIBLE CONNECTION
	ACOUSTIC INSULATION
	TYPE OF EQUIPMENT EQUIPMENT IDENTIFICATION
	TYPE OF DIFFUSER OR GRILLE GRILLE SIZE OR DIFFUSER NECK SIZE AIRFLOW (CFM OR L/s)
	STARTER / 3 PHASE / PHASE /
S	IN-SUITE ERV MASTER SWITCH
S	FAN SWITCH / IN-SUITE ERV OVERRIDE BUTTON
CO	CO SENSOR
G	GAS LINE
G	GAS METER
G	GAS COCK
PR	PRESSURE REDUCING VALVE
	SANITARY ABOVE GRADE
	SANITARY BELOW GRADE
	STORM ABOVE GRADE
	STORM BELOW GRADE
	DOMESTIC COLD WATER
	DOMESTIC HOT WATER
	DOMESTIC HOT WATER RECIRCULATION
	SANITARY VENT
	WATER METER
FD	FLOOR DRAIN
FFD	FUNNEL FLOOR DRAIN
HD	HUB DRAIN
RD	ROOF DRAIN
BLD	BLAB DRAIN
AD	AREA DRAIN
BLAD	BI-LEVEL AREA DRAIN
CB	CATCH BASIN
	SANITARY TRAP
	ELBOW UP
	ELBOW DOWN
CO	WALL CLEANOUT
CO	FLOOR CLEANOUT
HB	HOSE BIBB
NFHB	NON-FREEZE HOSE BIBB
	GLOBE VALVE
	GATE VALVE
	BALL VALVE
	BUTTERFLY VALVE
	PRESSURE REDUCING VALVE
	CHECK VALVE
	CAP
	COMPRESSED AIR OUTLET
	BACKFLOW PREVENTER
	CIRCUIT BALANCING VALVE
	MULTIPLE PIPES / - DENOTES NO. OF PIPES
T	TEMPERATURE SENSOR
T	THERMOMETER
	2-WAY MODULATING VALVE
	3-WAY MODULATING VALVE
	1/2"x4 1/2" THERMOWELL C/W 1/2" BUSHING x 1/2" PLUG
XXX	FLOOR ELEVATION ABOVE LEVEL
XXX	FLOOR ELEVATION THIS LEVEL
XXX	HEADROOM (FLOOR TO U/S HEIGHT)

PROJ/ISY	1	ISSUED FOR ---	E.P.
DATE	NO.	DESCRIPTION	BY

MARK VOID ALL PRINTS DATED PREVIOUS TO FINAL DATE ABOVE

REVISIONS

CONTRACTOR MUST CHECK AND VERIFY ALL DIMENSIONS AND CONDITIONS ON THE JOB AND REPORT DISCREPANCIES TO THE ENGINEERS BEFORE PROCEEDING WITH THE WORK OR THE FABRICATION OF PARTS OF THE WORK. THIS DRAWING IS RETAINED UPON COMPLETION OF THE WORK.

DRAWINGS ARE NOT TO BE SCALED

NOVA TREND ENGINEERING GROUP LTD.
119 West Beaver Creek Road, Unit 31
Richmond Hill, Ontario L4B 3M1
Tel: 905 882-5445
Fax: 905 882-5447
Email: cadnova@rogers.com

DRAWING TITLE
5/F SOUTH
MECHANICAL LAYOUT

PROJECT TITLE
ALEXANDRA PARK
XXX
TORONTO ONTARIO

DRAWN BY:	CHECKED BY:	SCALE:
G.S.	E.P.	1:50
DATE: FEB. 13	PROJECT NUMBER: 1313	DRAWING NUMBER: M-18 OF 35

Drawing name: \\CADSERVER\Current Dwg\1313\1313 - Alexandra Park\2015\1313M- 18,19 (5F PLAN - SOUTH & NORTH MECHANICAL LAYOUT).dwg Plotted: Apr 12, 2014 - 3:42pm

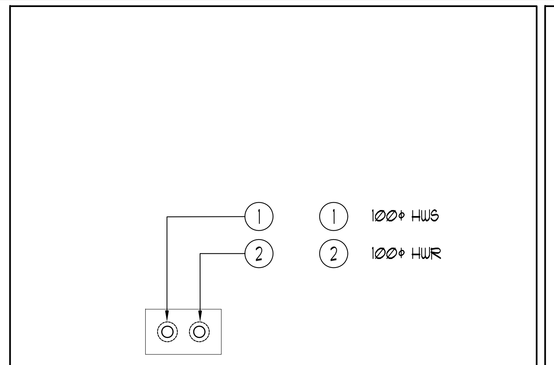

NORTH PIPE SHAFT A: 2/F -T/F. NTS

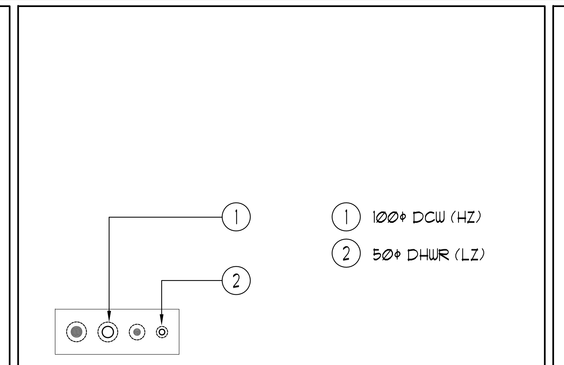

NORTH PIPE SHAFT B: 2/F -T/F NTS

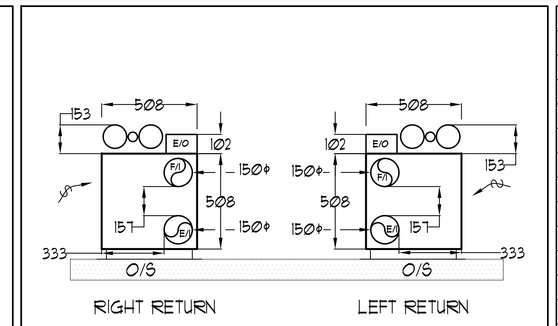

NOTE:
- ALL DIMENSIONS IN MM.
- HEIGHT OF FCU IS 2,023.

INSUITE FCU DIMENSIONS NTS

UNIT	NAME	AREA (SQ. FT.)	# OF WR	# OF POWDER	SIZE (T)	FIXTURE UNITS	BR	SQ. FT/T

GRILLE SIZING TABLE		
DESIGNATION	SIZE	L/S (UNLESS SPECIFIED ELSEWHERE)
SG-A	300x100	47-70
SG-B	300x150	71-93
SG-C	400x150	94-140
SG-D	450x150	141-188
EG-A	150x150	35
W-1	225x200	210mm(L)
W-2	425x200	INSULATED
W-3	625x200	WALL BOX

VERTICAL FAN COIL SIZE		
DESIGNATION	MODEL	W x D
FCU-1T	450	500x660
FCU-1.5T	600	500x660
FCU-2T	800	500x660
FCU-2.5T	1000	559x660
FCU-3T	1200	559x660

NOTE:
A MIN. OF 125mm IS REQUIRED ON THE SIDE OF PIPE RISER.

DUCT SIZING TABLE (4.06 m/s, 800 FPM)					
DESIGNATION	L/s	DUCT SIZE	DESIGNATION	L/s	DUCT SIZE
A	47	100x150	G	189	350x150
B	71	150x150	H	236	450x150
C	94	200x150	J	283	500x150
D	118	200x150	K	330	600x150
E	141	250x150	L	377	500x200
F	165	300x150			

GENERAL NOTES:

1) CONTRACTOR SHALL CO-ORDINATE ARCHITECTURAL, STRUCTURAL, LIGHTING, HVAC, SPRINKLER DRAWINGS TO AVOID AREAS OF CONFLICT AND TO MAINTAIN CEILING HEIGHTS.

2) CONTRACTOR SHALL REPORT ALL DISCREPANCIES AND AREA OF CONFLICTS TO THE ENGINEER PRIOR TO WORK BEGINS.

3) PROVIDE EXPANSION CHAMBERS FOR ALL KITCHEN SINKS.

4) SEE INSTALLATION DETAILS DRAWING FOR WASHER DOM. H+C WATER, SANITARY CONNECTION DETAILS.

5) SUPPLY AND INSTALL COMPLETE DOMESTIC HOT AND COLD WATER LINES, SANITARY AND VENT LINES TO EACH FIXTURE /EQUIPMENT INCLUDING WATER CLOSETS, LAVATORIES, BATHS, SHOWERS, KITCHEN SINK, WASHING MACHINES, DISHWASHERS, AND FLOOR DRAINS. KITCHEN SINK, LAVATORIES, WATER CLOSETS AND WASHING MACHINE TO BE C/W LOCALIZED SHUT-OFF VALVES.

6) ALL VENT PIPE INSTALLATION TO COMPLY WITH PLUMBING CODES.

7) FOR D.H.C. W. RISER SIZES, REFER TO RISER DIAGRAM

8) FIRE DAMPERS ARE REQUIRED TO BE LISTED AND ARE TO HAVE FIRE PROTECTION RATING OF THE PENETRATED FIRE SEPARATION.

9) THE PIPING PENETRATING THE VARIOUS FIRE SEPARATION IS REQUIRED TO BE FIRESTOPPED WITH A LISTED FIRESTOPPING MATERIAL IN ACCORDANCE WITH OBC ARTICLE 3.1.9.1

10) THE FIRE HOSE CABINET THAT ARE RECESSED INTO THE EXIT STAIR SHAFTS ARE REQUIRED TO BE SEPARATED FROM THE EXIT STAIR BY A 2 HR. FIRE SEPARATION.

11) NO FLEXIBLE DUCT SHALL BE USED FOR ANY IN-SUITE DUCTWORK.

12) PROVIDE 25MM EXTERNAL INSULATION TO ENTIRE FRESH AIR DUCT FROM EXTERIOR WALL TO ERV FAN COIL UNIT.

13) DRYER EXHAUST DUCT SHALL BE SMOOTH AND CORROSION-RESISTANT MATERIAL (FLEXIBLE CONNECTION IS NOT ACCEPTABLE).

REFER TO DWG. M-X FOR ACOUSTIC NOTES

2850mm CLEAR FLOOR TO UNDERSLAB

NOTES:

1. NORTH F/A SHAFT SERVING FROM G/F TO 14/F. F/A DUCT SERVING CORRIDOR FROM G/F TO 14/F. SEE VENTILATION RISER DIAGRAM FOR DETAILS.
2. PIPE SHAFT - REFER TO PIPE RISER DETAIL ON THIS DRAWING FOR DETAIL 6.
3. 150ø KITCHEN / DRYER / WR / FCU INTAKE / FCU EXHAUST DUCT. (TYPICAL UNLESS OTHERWISE NOTED)

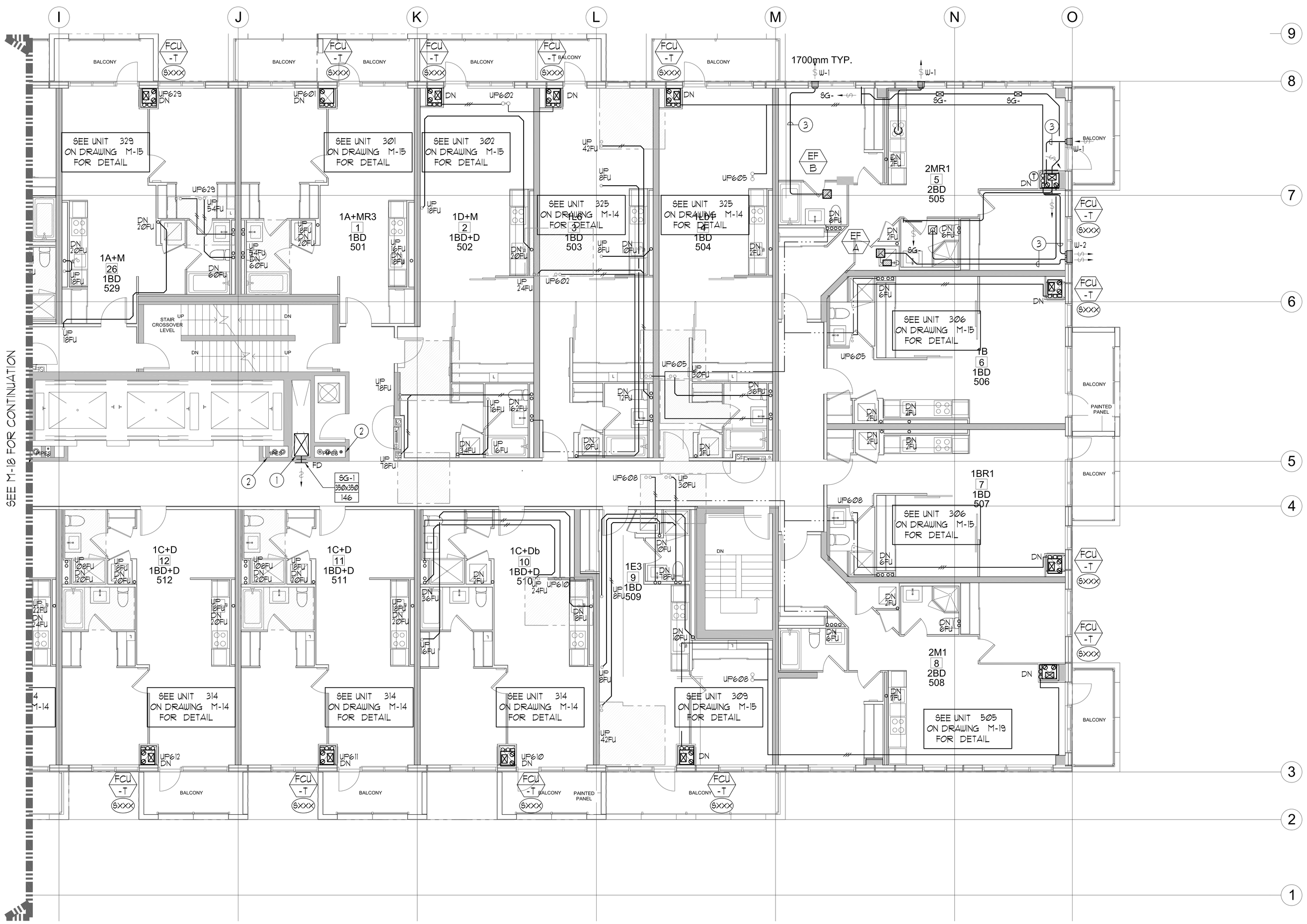

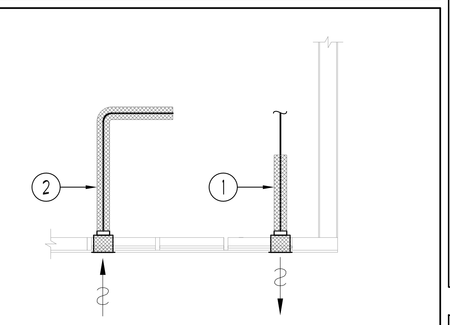

1. EXHAUST DUCTWORK TO BE C/W 1" THICK THERMAL INSULATION 6FT. FROM EXTERNAL WALL. (TYPICAL)
2. F/A INTAKE DUCTWORK TO BE C/W 1" THICK THERMAL INSULATION FOR ENTIRE LENGTH FROM EXTERIOR WALL TO ERV FCU. (TYPICAL)

TYPICAL DETAIL:INSULATION FOR INTAKE/EXHAUST DUCTWORK NTS

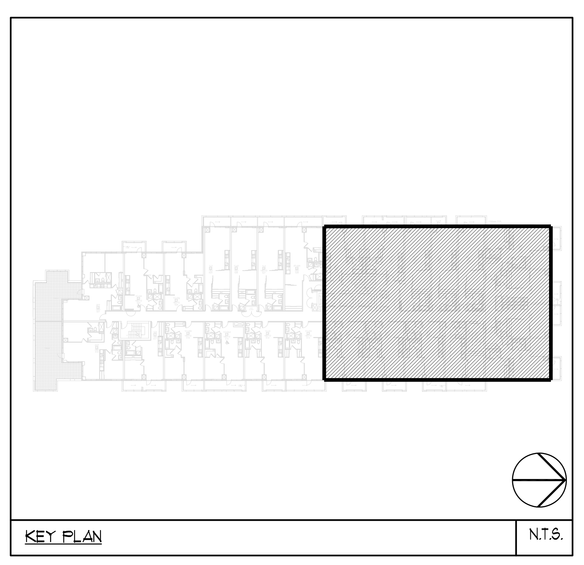

KEY PLAN N.T.S.

LEGEND MECHANICAL

SYMBOL	DESCRIPTION
	SUPPLY AIR DIFFUSER
	SUPPLY AIR TROFFER
	LINEAR SUPPLY DIFFUSER
T	THERMOSTAT
S	FAN SWITCH
	RETURN AIR GRILLE
	EXHAUST AIR GRILLE
	SUPPLY DUCT UP
	SUPPLY DUCT DOWN
	RETURN DUCT UP
	RETURN DUCT DOWN
	EXHAUST DUCT UP
	EXHAUST DUCT DOWN
FD	FIRE DAMPER
BD	BALANCING DAMPER
	MOTORIZED DAMPER
MFD	MOTORIZED FIRE DAMPER
BDD	BACKDRAFT DAMPER
OBD	OPPOSED BLADE VOLUME CONTROL DAMPER C/W LOCKING QUADRANT
	TURNING VANES
	FLEXIBLE CONNECTION
	ACOUSTIC INSULATION
	TYPE OF EQUIPMENT EQUIPMENT IDENTIFICATION
	TYPE OF DIFFUSER OR GRILLE GRILLE SIZE OR DIFFUSER NECK SIZE AIRFLOW CFM OR L/S
	STARTER / 3 PHASE / PHASE /
S	IN-SUITE ERV MASTER SWITCH
S	FAN SWITCH / IN-SUITE ERV OVERRIDE BUTTON
CO	CO SENSOR
G	GAS LINE
G	GAS METER
G	GAS COCK
	PRESSURE REDUCING VALVE
	SANITARY ABOVE GRADE
	SANITARY BELOW GRADE
	STORM ABOVE GRADE
	STORM BELOW GRADE
	DOMESTIC COLD WATER
	DOMESTIC HOT WATER
	DOMESTIC HOT WATER RECIRCULATION
V	SANITARY VENT
W	WATER METER
FD	FLOOR DRAIN
FFD	FUNNEL FLOOR DRAIN
HD	HUB DRAIN
RD	ROOF DRAIN
BLD	BLAB DRAIN
AD	AREA DRAIN
BLAD	BI-LEVEL AREA DRAIN
CB	CATCH BASIN
	SANITARY TRAP
	ELBOW UP
	ELBOW DOWN
CO	WALL CLEANOUT
CO	FLOOR CLEANOUT
HB	HOSE BIBB
NHB	NON-FREEZE HOSE BIBB
	GLOBE VALVE
	GATE VALVE
	BALL VALVE
	BUTTERFLY VALVE
	PRESSURE REDUCING VALVE
	CHECK VALVE
	CAP
	COMPRESSED AIR OUTLET
N	BACKFLOW PREVENTER
	CIRCUIT BALANCING VALVE
	MULTIPLE PIPES / - DENOTES NO. OF PIPES
T	TEMPERATURE SENSOR
T	THERMOMETER
	2-WAY MODULATING VALVE
	3-WAY MODULATING VALVE
	1/2"x4"(1) THERMOWELL C/W 1/2" BUSHING x 1/2" PLUG
XXXX	FLOOR ELEVATION ABOVE LEVEL
XXXX	FLOOR ELEVATION THIS LEVEL
XXXX	HEADROOM (FLOOR TO U/S HEIGHT)

TR/DD/YY	I	ISSUED FOR ---	E.P.
DATE	NO	DESCRIPTION	BY

PLANK VOID - ALL PRINTS DATED PREVIOUS TO FINAL DATE ABOVE

REVISIONS

CONTRACTOR MUST CHECK AND VERIFY ALL DIMENSIONS AND CONDITIONS ON THE JOB AND REPORT DISCREPANCIES TO THE ENGINEERS BEFORE PROCEEDING WITH THE WORK. THIS DRAWING IS THE PROPERTY OF THE ENGINEERS AND MUST BE RETURNED UPON COMPLETION OF THE WORK.

DRAWINGS ARE NOT TO BE SCALED

NOVA TREND ENGINEERING GROUP LTD.

179 West Beaver Creek Road, Unit 31
Richmond Hill, Ontario L4B 3M1
Tel: 905 882-5445
Fax: 905 882-5447
Email: cad@novatrendeng.com

DRAWING TITLE:
5/F NORTH
MECHANICAL LAYOUT

PROJECT TITLE:
ALEXANDRA PARK

XXX
TORONTO ONTARIO

DRAWN BY:	CHECKED BY:	SCALE:
G.S.	E.P.	1:50
DATE: FEB. 13	PROJECT NUMBER: 1313	DRAWING NUMBER: M-19 OF 39

Drawing name: \\CADSERVER\Current Dwgs\1313 - Alexandra Park\2013\13-13M - 18,19 5F PLAN - SOUTH & NORTH MECHANICAL LAYOUT.dwg Plotted: Mar 12, 2014 - 3:42pm

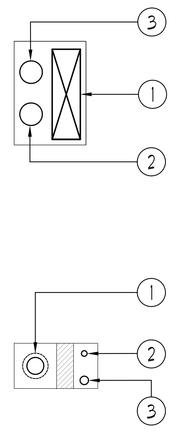

SOUTH PIPE SHAFT: 2/F -T/F | NTS

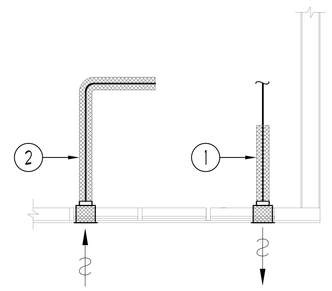

1. EXHAUST DUCTWORK TO BE C/W 1" THICK THERMAL INSULATION 6FT. FROM EXTERNAL WALL. (TYPICAL)
2. F/A INTAKE DUCTWORK TO BE C/W 1" THICK THERMAL INSULATION FOR ENTIRE LENGTH FROM EXTERIOR WALL TO ERV FCU. (TYPICAL)

TYPICAL DETAIL: INSULATION FOR INTAKE & EXHAUST DUCTWORK | NTS

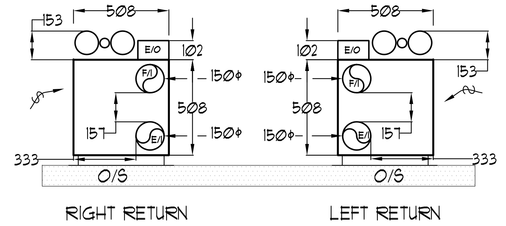

NOTE:
- ALL DIMENSIONS IN MM.
- HEIGHT OF FCU IS 2,073.

INSUITE FCU DIMENSIONS | NTS

UNIT	NAME	AREA (SQ. FT.)	# OF WR	# OF POWDER	SIZE (T)	FIXTURE UNITS	BR	SQ. FT./T

GRILLE SIZING TABLE

DESIGNATION	SIZE	L/S	(UNLESS SPECIFIED ELSEWHERE)
SG-A	300x100	47-70	
SG-B	300x150	71-93	
SG-C	400x150	94-140	
SG-D	450x150	141-188	
EG-A	150x150	35	
W-1	225x200	210mm(L)	
W-2	425x200	INSULATED	
W-3	625x200	WALL BOX	

VERTICAL FAN COIL SIZE

DESIGNATION	MODEL	W x D
FCU-1T	450	508x660
FCU-1.5T	600	508x660
FCU-2T	800	508x660
FCU-2.5T	1000	559x660
FCU-3T	1200	559x660

NOTE:
A MIN. OF 125mm IS REQUIRED ON THE SIDE OF PIPE RISER.

DUCT SIZING TABLE
(4.06 m/s, 800 FPM)

DESIGNATION	L/s	DUCT SIZE	DESIGNATION	L/s	DUCT SIZE
A	47	100x150	G	189	350x150
B	71	150x150	H	236	450x150
C	94	200x150	J	283	500x150
D	118	200x150	K	330	600x150
E	141	250x150	L	377	500x200
F	165	300x150			

GENERAL NOTES:

1) CONTRACTOR SHALL CO-ORDINATE ARCHITECTURAL, STRUCTURAL, LIGHTING, HVAC, SPRINKLER DRAWINGS TO AVOID AREAS OF CONFLICT AND TO MAINTAIN CEILING HEIGHTS.

2) CONTRACTOR SHALL REPORT ALL DISCREPANCIES AND AREA OF CONFLICTS TO THE ENGINEER PRIOR TO WORK BEGINS.

3) PROVIDE EXPANSION CHAMBERS FOR ALL KITCHEN SINKS.

4) SEE INSTALLATION DETAILS DRAWING FOR WASHER DOM. H+C WATER, SANITARY CONNECTION DETAILS.

5) SUPPLY AND INSTALL COMPLETE DOMESTIC HOT AND COLD WATER LINES, SANITARY AND VENT LINES TO EACH FIXTURE /EQUIPMENT INCLUDING WATER CLOSETS, LAVATORIES, BATHS, SHOWERS, KITCHEN SINK, WASHING MACHINES, DISHWASHERS, AND FLOOR DRAINS. KITCHEN SINK, LAVATORIES, WATER CLOSETS AND WASHING MACHINE TO BE C/W LOCALIZED SHUT-OFF VALVES.

6) ALL VENT PIPE INSTALLATION TO COMPLY WITH PLUMBING CODES.

7) FOR D.H.C. W. RISER SIZES, REFER TO RISER DIAGRAM

8) FIRE DAMPERS ARE REQUIRED TO BE LISTED AND ARE TO HAVE FIRE PROTECTION RATING OF THE PENETRATED FIRE SEPARATION.

9) THE PIPING PENETRATING THE VARIOUS FIRE SEPARATION IS REQUIRED TO BE FIRESTOPPED WITH A LISTED FIRESTOPPING MATERIAL IN ACCORDANCE WITH OBC ARTICLE 3.1.9.)

10) THE FIRE HOSE CABINET THAT ARE RECESSED INTO THE EXIT STAIR SHAFTS ARE REQUIRED TO BE SEPARATED FROM THE EXIT STAIR BY A 2 HR. FIRE SEPARATION.

11) NO FLEXIBLE DUCT SHALL BE USED FOR ANY IN-SUITE DUCTWORK.

12) PROVIDE 25MM EXTERNAL INSULATION TO ENTIRE FRESH AIR DUCT FROM EXTERIOR WALL TO ERV FAN COIL UNIT.

13) DRYER EXHAUST DUCT SHALL BE SMOOTH AND CORROSION-RESISTANT MATERIAL (FLEXIBLE CONNECTION IS NOT ACCEPTABLE).

REFER TO DWG. M-X FOR ACOUSTIC NOTES

⚠ 2750mm CLEAR FLOOR TO UNDERSLAB

NOTES:

1. SOUTH F/A SHAFT A FROM G/F TO 8/F DUCT SERVING CORRIDOR FROM G/F TO 8/F. SEE VENTILATION RISER DIAGRAM FOR DETAILS.
2. SOUTH F/A SHAFT B FROM G/F TO 14/F. F/A DUCT SERVING CORRIDOR FROM 9/F TO 14/F. SEE VENTILATION RISER DIAGRAM FOR DETAILS.
3. PIPE SHAFT - REFER TO PIPE RISER DETAIL ON THIS DRAWING FOR DETAILS.
4. 150ø KITCHEN / DRYER / W/R / FCU INTAKE / FCU EXHAUST DUCT. (TYPICAL UNLESS OTHERWISE NOTED)

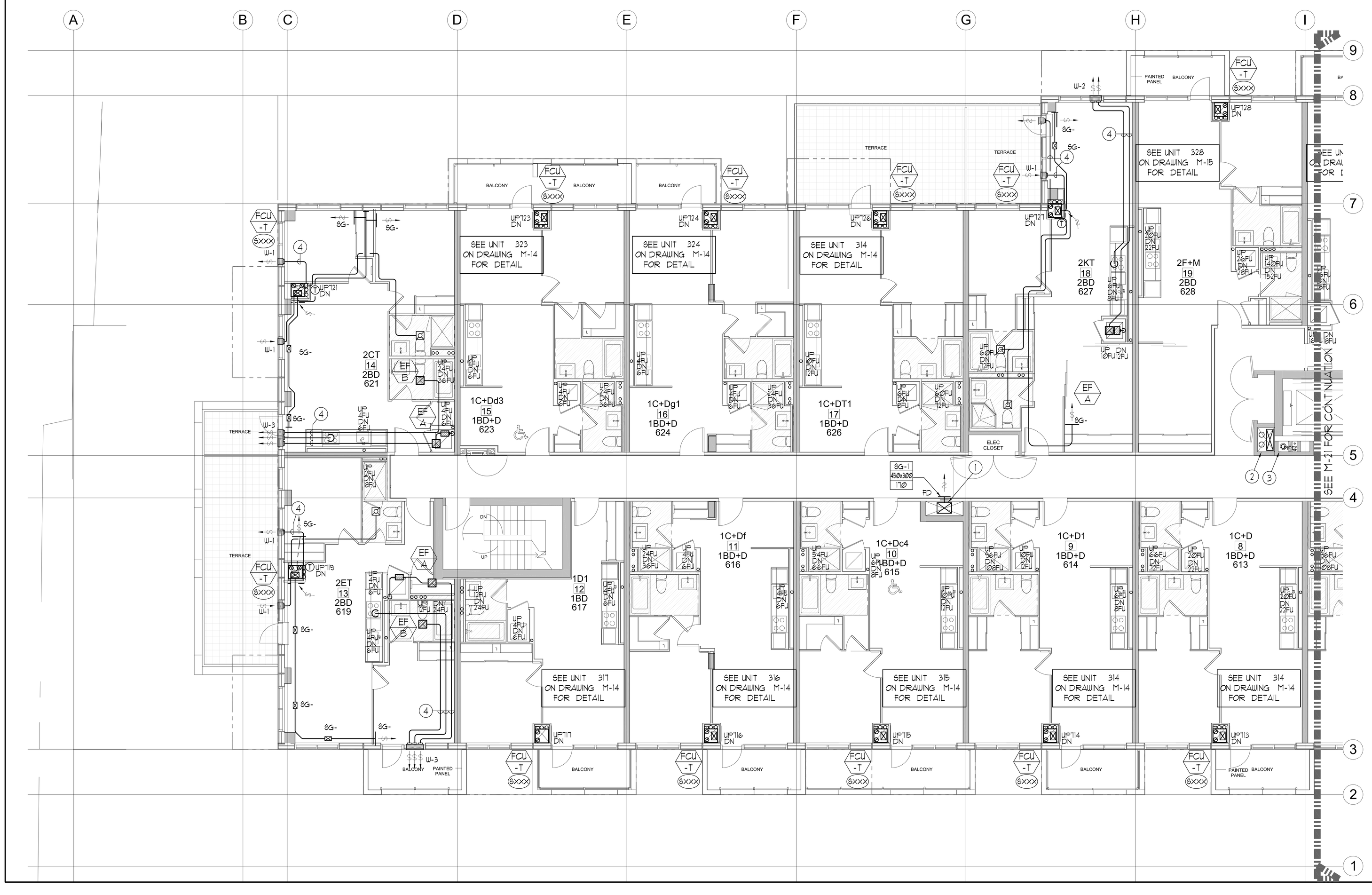

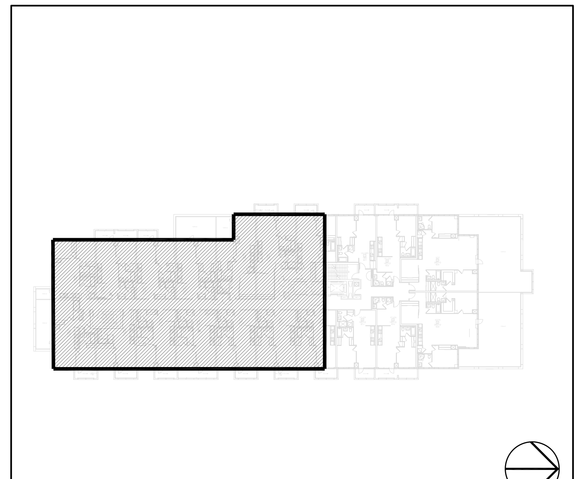

KEY PLAN | N.T.S.

LEGEND
MECHANICAL

SYMBOL	DESCRIPTION
	SUPPLY AIR DIFFUSER
	SUPPLY AIR TROFFER
	LINEAR SUPPLY DIFFUSER
T	THERMOSTAT
S	FAN SWITCH
	RETURN AIR GRILLE
	EXHAUST AIR GRILLE
	SUPPLY DUCT UP
	SUPPLY DUCT DOWN
	RETURN DUCT UP
	RETURN DUCT DOWN
	EXHAUST DUCT UP
	EXHAUST DUCT DOWN
FD	FIRE DAMPER
BD	BALANCING DAMPER
MD	MOTORIZED DAMPER
MFD	MOTORIZED FIRE DAMPER
BDD	BACKDRAFT DAMPER
OBD	OPPOSED BLADE VOLUME CONTROL DAMPER C/W LOCKING QUADRANT
	TURNING VANES
	FLEXIBLE CONNECTION
	ACOUSTIC INSULATION
XX	TYPE OF EQUIPMENT EQUIPMENT IDENTIFICATION
XXX	TYPE OF DIFFUSER OR GRILLE
XXX	GRILLE SIZE OR DIFFUSER NECK SIZE
XXX	AIRFLOW (CFM OR L/S)
	STARTER / 3 PHASE / PHASE /
S	IN-SUITE ERV MASTER SWITCH
S	FAN SWITCH / IN-SUITE ERV OVERRIDE BUTTON
CO	CO SENSOR
G	GAS LINE
G	GAS METER
	GAS COCK
	PRESSURE REDUCING VALVE
	SANITARY ABOVE GRADE
	SANITARY BELOW GRADE
	STORM ABOVE GRADE
	STORM BELOW GRADE
	DOMESTIC COLD WATER
	DOMESTIC HOT WATER
	DOMESTIC HOT WATER RECIRCULATION
	SANITARY VENT
	WATER METER
FD	FLOOR DRAIN
FFD	FUNNEL FLOOR DRAIN
HD	HUB DRAIN
RD	ROOF DRAIN
BLD	BLAB DRAIN
AD	AREA DRAIN
BLAD	BI-LEVEL AREA DRAIN
CB	CATCH BASIN
	SANITARY TRAP
	ELBOW UP
	ELBOW DOWN
CO	WALL CLEANOUT
CO	FLOOR CLEANOUT
HB	HOSE BIBB
NFHB	NON-FREEZE HOSE BIBB
	GLOBE VALVE
	GATE VALVE
	BALL VALVE
	BUTTERFLY VALVE
	PRESSURE REDUCING VALVE
	CHECK VALVE
	CAP
	COMPRESSED AIR OUTLET
N	BACKFLOW PREVENTER
	CIRCUIT BALANCING VALVE
	MULTIPLE PIPES / / - DENOTES NO. OF PIPES
T	TEMPERATURE SENSOR
T	THERMOMETER
	2-WAY MODULATING VALVE
	3-WAY MODULATING VALVE
	1/2"x4"(T) THERMOWELL C/W 1/2" BUSHING & 1/2" PLUG
XXX	FLOOR ELEVATION (ABOVE LEVEL)
XXX	FLOOR ELEVATION THIS LEVEL
XXX	HEADROOM (FLOOR TO U/S HEIGHT)

PROD/ITY	1	ISSUED FOR ---	E.P.
DATE	NO.	DESCRIPTION	BY

MARK VOID ALL PRINTS DATED PREVIOUS TO FINAL DATE ABOVE

REVISIONS

CONTRACTOR MUST CHECK AND VERIFY ALL DIMENSIONS AND CONDITIONS ON THE JOB AND REPORT DISCREPANCIES TO THE ENGINEERS BEFORE PROCEEDING WITH THE WORK. DRAWINGS AND SPECIFICATIONS ARE THE ENGINEERS AND MUST BE RETURNED UPON COMPLETION OF THE WORK.

DRAWINGS ARE NOT TO BE SCALED

NOVA TREND ENGINEERING GROUP LTD.
115 West Beaver Creek Road, Unit 31
Richmond Hill, Ontario L4B 3M1
Tel: 905 882-9445
Fax: 905 882-9441
Email: cad@novatrendeng.com

DRAWING TITLE
6/F SOUTH
MECHANICAL LAYOUT

PROJECT TITLE
ALEXANDRA PARK
XXX
TORONTO ONTARIO

DRAWN BY:	CHECKED BY:	SCALE:
G.S.	E.P.	1:50
DATE: FEB. 13	PROJECT NUMBER: 1313	DRAWING NUMBER: M-20 OF 99

Drawing name: \\CADSERVER\Current Dwg\1313\1313 - Alexandra Park\2H1313\1313M- 20.2\1\6F PLAN -SOUTH& NORTH MECHANICAL LAYOUT.dwg Plotted: Mar 12, 2014 - 3:42pm

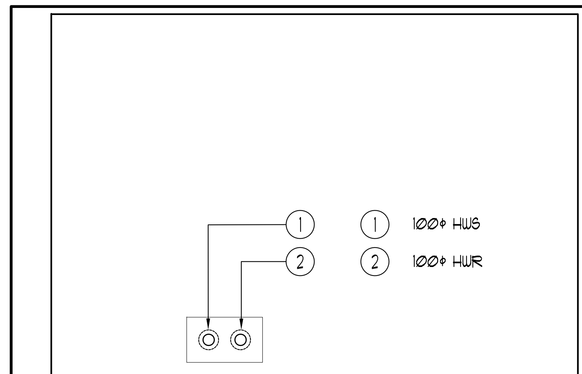

NORTH PIPE SHAFT A: 2/F -T/F. NTS

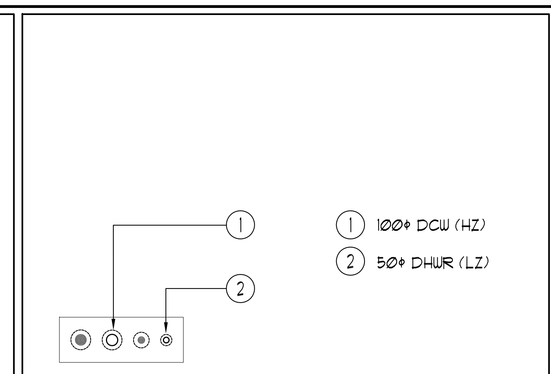

NORTH PIPE SHAFT B: 2/F -T/F NTS

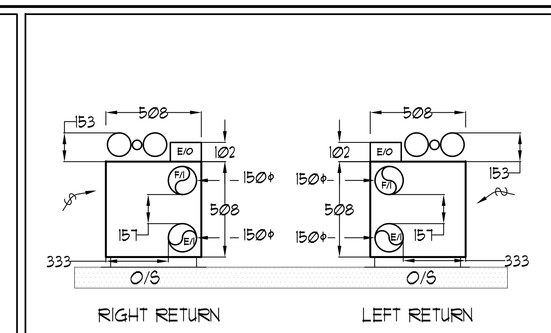

NOTE:
- ALL DIMENSIONS IN MM.
- HEIGHT OF FCU IS 2,023.

INSUITE FCU DIMENSIONS NTS

UNIT	NAME	AREA (SQ. FT.)	# OF WR	# OF POWDER	SIZE (T)	FIXTURE UNITS	BR	SQ. FT/T

GRILLE SIZING TABLE

DESIGNATION	SIZE	L/s	(UNLESS SPECIFIED ELSEWHERE)
SG-A	300x100	47-70	
SG-B	300x150	71-93	
SG-C	400x150	94-140	
SG-D	450x150	141-188	
EG-A	150x150	35	
W-1	225x200	210mm(L)	
W-2	425x200	INSULATED	
W-3	625x200	WALL BOX	

VERTICAL FAN COIL SIZE

DESIGNATION	MODEL	W x D
FCU-1T	450	500x660
FCU-1.5T	600	500x660
FCU-2T	800	500x660
FCU-2.5T	1000	559x660
FCU-3T	1200	559x660

NOTE:
A MIN. OF 125mm IS REQUIRED ON THE SIDE OF PIPE RISER.

DUCT SIZING TABLE
(4.06 m/s, 800 FPM)

DESIGNATION	L/s	DUCT SIZE	DESIGNATION	L/s	DUCT SIZE
A	47	100x150	G	189	350x150
B	71	150x150	H	236	450x150
C	94	200x150	J	283	500x150
D	118	200x150	K	330	600x150
E	141	250x150	L	377	500x200
F	165	300x150			

GENERAL NOTES:

1) CONTRACTOR SHALL CO-ORDINATE ARCHITECTURAL, STRUCTURAL, LIGHTING, HVAC, SPRINKLER DRAWINGS TO AVOID AREAS OF CONFLICT AND TO MAINTAIN CEILING HEIGHTS.

2) CONTRACTOR SHALL REPORT ALL DISCREPANCIES AND AREA OF CONFLICTS TO THE ENGINEER PRIOR TO WORK BEGINS.

3) PROVIDE EXPANSION CHAMBERS FOR ALL KITCHEN SINKS.

4) SEE INSTALLATION DETAILS DRAWING FOR WASHER DOM. H+C WATER, SANITARY CONNECTION DETAILS.

5) SUPPLY AND INSTALL COMPLETE DOMESTIC HOT AND COLD WATER LINES, SANITARY AND VENT LINES TO EACH FIXTURE /EQUIPMENT INCLUDING WATER CLOSETS, LAVATORIES, BATHS, SHOWERS, KITCHEN SINK, WASHING MACHINES, DISHWASHERS, AND FLOOR DRAINS. KITCHEN SINK, LAVATORIES, WATER CLOSETS AND WASHING MACHINE TO BE C/W LOCALIZED SHUT-OFF VALVES.

6) ALL VENT PIPE INSTALLATION TO COMPLY WITH PLUMBING CODES.

7) FOR D.H.C. W. RISER SIZES, REFER TO RISER DIAGRAM

8) FIRE DAMPERS ARE REQUIRED TO BE LISTED AND ARE TO HAVE FIRE PROTECTION RATING OF THE PENETRATED FIRE SEPARATION.

9) THE PIPING PENETRATING THE VARIOUS FIRE SEPARATION IS REQUIRED TO BE FIRESTOPPED WITH A LISTED FIRESTOPPING MATERIAL IN ACCORDANCE WITH OBC ARTICLE 3.1.9.1

10) THE FIRE HOSE CABINET THAT ARE RECESSED INTO THE EXIT STAIR SHAFTS ARE REQUIRED TO BE SEPARATED FROM THE EXIT STAIR BY A 2 HR. FIRE SEPARATION.

11) NO FLEXIBLE DUCT SHALL BE USED FOR ANY IN-SUITE DUCTWORK.

12) PROVIDE 25MM EXTERNAL INSULATION TO ENTIRE FRESH AIR DUCT FROM EXTERIOR WALL TO ERV FAN COIL UNIT.

13) DRYER EXHAUST DUCT SHALL BE SMOOTH AND CORROSION-RESISTANT MATERIAL (FLEXIBLE CONNECTION IS NOT ACCEPTABLE).

REFER TO DWG. M-X FOR ACOUSTIC NOTES

2750mm CLEAR FLOOR TO UNDERSLAB

NOTES:

1. NORTH F/A SHAFT SERVING FROM G/F TO 14/F. F/A DUCT SERVING CORRIDOR FROM G/F TO 14/F. SEE VENTILATION RISER DIAGRAM FOR DETAILS.
2. PIPE SHAFT - REFER TO PIPE RISER DETAIL ON THIS DRAWING FOR DETAILS.
3. 150ø KITCHEN / DRYER / WR / FCU INTAKE / FCU EXHAUST DUCT. (TYPICAL UNLESS OTHERWISE NOTED)

LEGEND
MECHANICAL

SYMBOL	DESCRIPTION
	SUPPLY AIR DIFFUSER
	SUPPLY AIR TROFFER
	LINEAR SUPPLY DIFFUSER
T	THERMOSTAT
S	FAN SWITCH
	RETURN AIR GRILLE
	EXHAUST AIR GRILLE
	SUPPLY DUCT UP
	SUPPLY DUCT DOWN
	RETURN DUCT UP
	RETURN DUCT DOWN
	EXHAUST DUCT UP
	EXHAUST DUCT DOWN
FD	FIRE DAMPER
BD	BALANCING DAMPER
MD	MOTORIZED DAMPER
MFD	MOTORIZED FIRE DAMPER
BDD	BACKDRAFT DAMPER
OBD	OPPOSED BLADE VOLUME CONTROL DAMPER C/W LOCKING QUADRANT
	TURNING VANES
	FLEXIBLE CONNECTION
	ACOUSTIC INSULATION
	-TYPE OF EQUIPMENT -EQUIPMENT IDENTIFICATION
	-TYPE OF DIFFUSER OR GRILLE -GRILLE SIZE OR DIFFUSER NECK SIZE -AIRFLOW CFM OR L/s
	STARTER (3 PHASE , 1 PHASE)
S	IN-SUITE ERV MASTER SWITCH
S	FAN SWITCH / IN-SUITE ERV OVERRIDE BUTTON
CO	CO SENSOR
G	GAS LINE
G	GAS METER
G	GAS COCK
	PRESSURE REDUCING VALVE
	SANITARY ABOVE GRADE
	SANITARY BELOW GRADE
	STORM ABOVE GRADE
	STORM BELOW GRADE
	DOMESTIC COLD WATER
	DOMESTIC HOT WATER
	DOMESTIC HOT WATER RECIRCULATION
	SANITARY VENT
	WATER METER
FD	FLOOR DRAIN
FFD	FUNNEL FLOOR DRAIN
HD	HUB DRAIN
RD	ROOF DRAIN
BLD	BLAB DRAIN
AD	AREA DRAIN
BLAD	BI-LEVEL AREA DRAIN
CB	CATCH BASIN
	SANITARY TRAP
	ELBOW UP
	ELBOW DOWN
CO	WALL CLEANOUT
CO	FLOOR CLEANOUT
HB	HOSE BIBB
NFHB	NON-FREEZE HOSE BIBB
	GLOBE VALVE
	GATE VALVE
	BALL VALVE
	BUTTERFLY VALVE
	PRESSURE REDUCING VALVE
	CHECK VALVE
	CAP
	COMPRESSED AIR OUTLET
	BACKFLOW PREVENTER
	CIRCUIT BALANCING VALVE
	MULTIPLE PIPES / - DENOTES NO. OF PIPES
T	TEMPERATURE SENSOR
T	THERMOMETER
	2-WAY MODULATING VALVE
	3-WAY MODULATING VALVE
	10"x4"(D) THERMOWELL C/W 1/2" BUSHING X 1/2" PLUG
	-FLOOR ELEVATION ABOVE LEVEL -FLOOR ELEVATION THIS LEVEL -HEADROOM (FLOOR TO U/S HEIGHT)

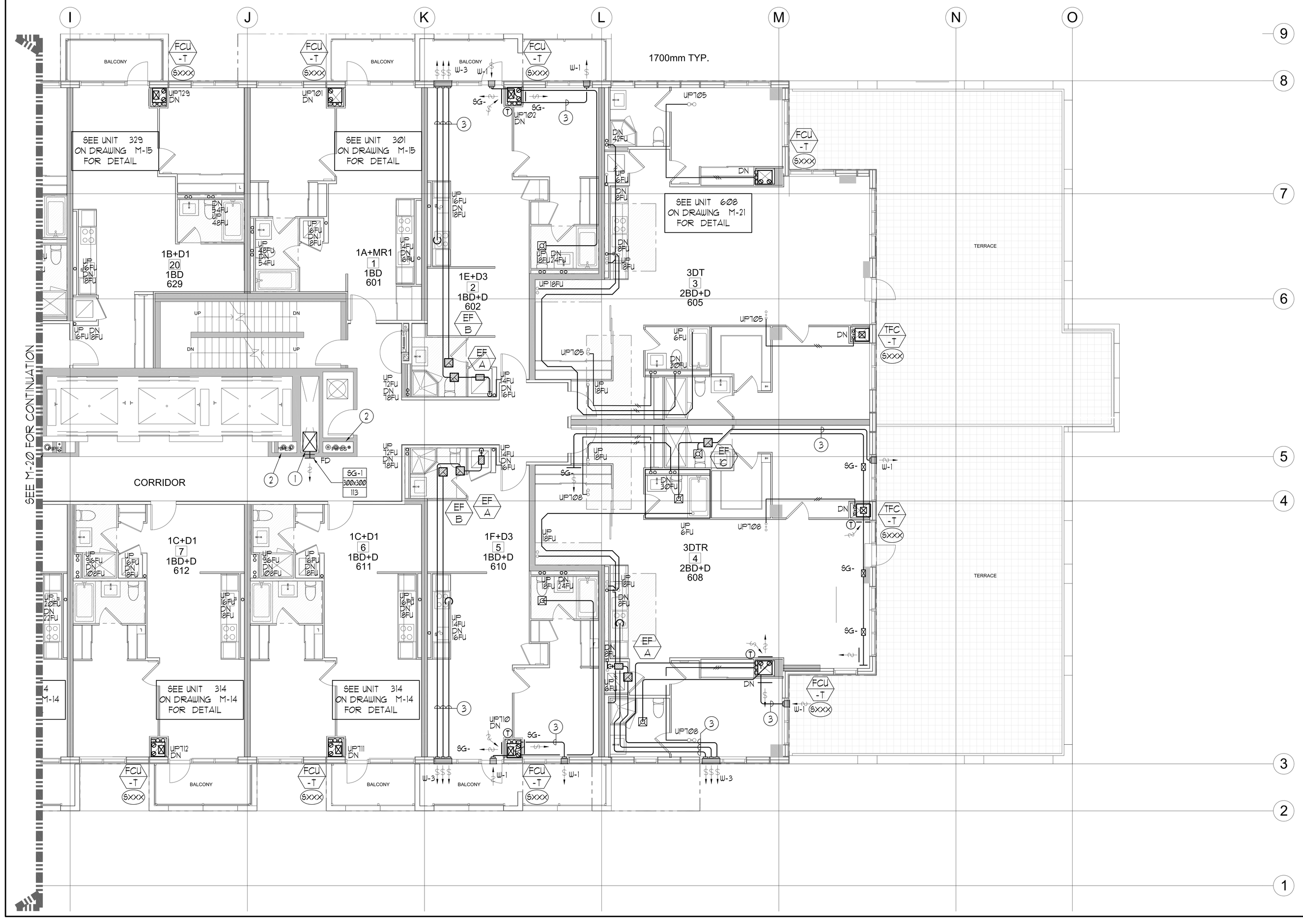

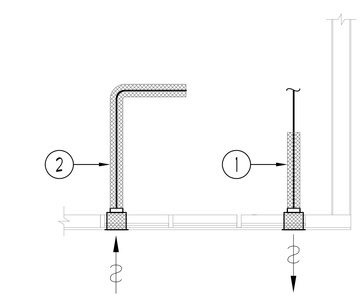

1. EXHAUST DUCTWORK TO BE C/W 1" THICK THERMAL INSULATION 6FT. FROM EXTERNAL WALL. (TYPICAL)
2. F/A INTAKE DUCTWORK TO BE C/W 1" THICK THERMAL INSULATION FOR ENTIRE LENGTH FROM EXTERIOR WALL TO ERV FCU. (TYPICAL)

TYPICAL DETAIL:INSULATION FOR INTAKE/EXHAUST DUCTWORK NTS

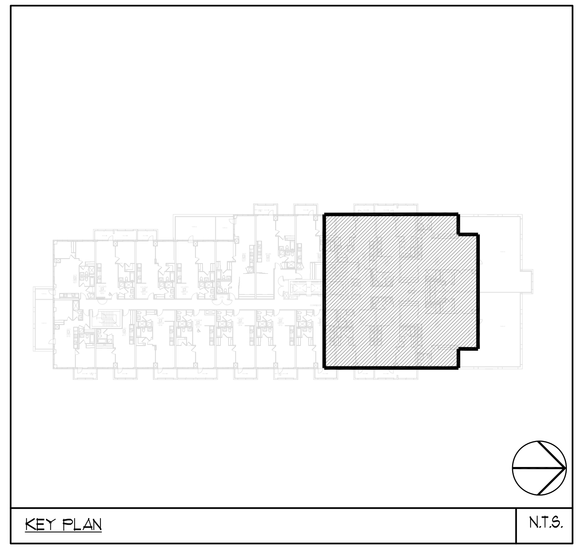

KEY PLAN N.T.S.

PRIORITY	1	ISSUED FOR ---	E.P.
DATE	NO.	DESCRIPTION	BY

MARK VOID ALL PRINTS DATED PREVIOUS TO FINAL DATE ABOVE

REVISIONS

CONTRACTOR MUST CHECK AND VERIFY ALL DIMENSIONS AND CONDITIONS ON THE JOB AND REPORT DISCREPANCIES TO THE ENGINEERS BEFORE PROCEEDING WITH THE WORK. THIS DRAWING IS THE PROPERTY OF THE ENGINEERS AND MUST BE RETURNED UPON COMPLETION OF THE WORK.

DRAWINGS ARE NOT TO BE SCALED

NOVA TREND ENGINEERING CONSULTANTS LTD.
179 West Beaver Creek Road, Unit 31
Richmond Hill, Ontario L4B 3M1
Tel: 905 882-5445
Fax: 905 882-5447
Email: cad@novatrendeng.com

DRAWING TITLE:
6/F NORTH
MECHANICAL LAYOUT

PROJECT TITLE:
ALEXANDRA PARK

XXX
TORONTO ONTARIO

DRAWN BY:	CHECKED BY:	SCALE:
G.S.	E.P.	1:50

DATE:	PROJECT NUMBER:	DRAWING NUMBER:
FEB. 13	1313	M-21 OF 35

Drawing name: \\CADSERVER\Current Dwg\1313\1313 - Alexandra Park\2d\1313-M-20-21 PLAN -SOUTH& NORTH MECHANICAL LAYOUT.dwg Plotted: Mar 12, 2014 - 3:42pm

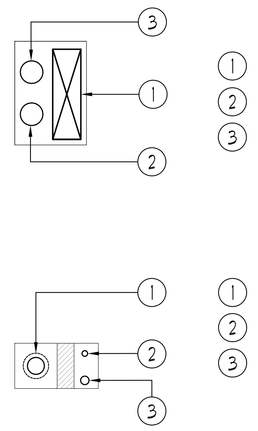

SOUTH PIPE SHAFT, 2/F -T/F — NTS

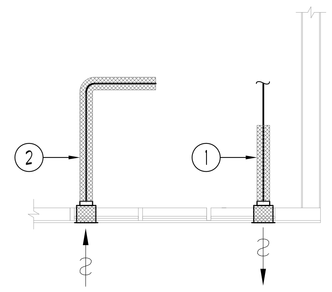

1. EXHAUST DUCTWORK TO BE C/W 1" THICK THERMAL INSULATION 6FT. FROM EXTERNAL WALL. (TYPICAL)
2. F/A INTAKE DUCTWORK TO BE C/W 1" THICK THERMAL INSULATION FOR ENTIRE LENGTH FROM EXTERIOR WALL TO ERV FCU. (TYPICAL)

TYPICAL DETAIL: INSULATION FOR INTAKE/EXHAUST DUCTWORK — NTS

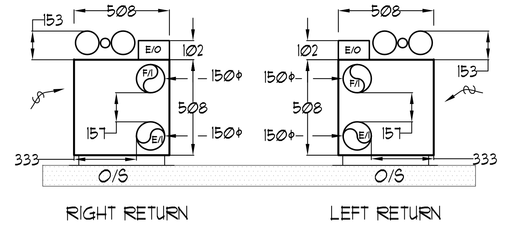

NOTE:
- ALL DIMENSIONS IN MM.
- HEIGHT OF FCU IS 2,013.

INSUITE FCU DIMENSIONS — NTS

UNIT	NAME	AREA (SQ. FT.)	# OF WR	# OF POWDER	SIZE (T)	FIXTURE UNITS	BR	SQ. FT/T

GRILLE SIZING TABLE

DESIGNATION	SIZE	L/S	(GALESS SPECIFIED ELSEWHERE)
SG-A	300x100	47-70	
SG-B	300x150	71-93	
SG-C	400x150	94-140	
SG-D	450x150	141-188	
EG-A	150x150	35	
W-1	225x200	210mm(L)	
W-2	425x200	INSULATED	
W-3	625x200	WALL BOX	

VERTICAL FAN COIL SIZE

DESIGNATION	MODEL	W x D
FCU-1T	450	508x660
FCU-1.5T	600	508x660
FCU-2T	800	508x660
FCU-2.5T	1000	559x660
FCU-3T	1200	559x660

NOTE:
A MIN. OF 175mm IS REQUIRED ON THE SIDE OF PIPE RISER.

DUCT SIZING TABLE
(4.06 m/s, 800 FPM)

DESIGNATION	L/s	DUCT SIZE	DESIGNATION	L/s	DUCT SIZE
A	47	100x150	G	189	350x150
B	71	150x150	H	236	450x150
C	94	200x150	J	283	500x150
D	118	200x150	K	330	600x150
E	141	250x150	L	377	500x200
F	165	300x150			

GENERAL NOTES:

1) CONTRACTOR SHALL CO-ORDINATE ARCHITECTURAL, STRUCTURAL, LIGHTING, HVAC, SPRINKLER DRAWINGS TO AVOID AREAS OF CONFLICT AND TO MAINTAIN CEILING HEIGHTS.
2) CONTRACTOR SHALL REPORT ALL DISCREPANCIES AND AREA OF CONFLICTS TO THE ENGINEER PRIOR TO WORK BEGINS.
3) PROVIDE EXPANSION CHAMBERS FOR ALL KITCHEN SINKS.
4) SEE INSTALLATION DETAILS DRAWING FOR WASHER DOM. H+C WATER, SANITARY CONNECTION DETAILS.
5) SUPPLY AND INSTALL COMPLETE DOMESTIC HOT AND COLD WATER LINES, SANITARY AND VENT LINES TO EACH FIXTURE /EQUIPMENT INCLUDING WATER CLOSETS, LAVATORIES, BATHS, SHOWERS, KITCHEN SINK, WASHING MACHINES, DISHWASHERS, AND FLOOR DRAINS. KITCHEN SINK, LAVATORIES, WATER CLOSETS AND WASHING MACHINE TO BE C/W LOCALIZED SHUT-OFF VALVES.
6) ALL VENT PIPE INSTALLATION TO COMPLY WITH PLUMBING CODES.
7) FOR D.H.C. W. RISER SIZES, REFER TO RISER DIAGRAM
8) FIRE DAMPERS ARE REQUIRED TO BE LISTED AND ARE TO HAVE FIRE PROTECTION RATING OF THE PENETRATED FIRE SEPARATION.
9) THE PIPING PENETRATING THE VARIOUS FIRE SEPARATION IS REQUIRED TO BE FIRESTOPPED WITH A LISTED FIRESTOPPING MATERIAL IN ACCORDANCE WITH OBC ARTICLE 3.1.9.)
10) THE FIRE HOSE CABINET THAT ARE RECESSED INTO THE EXIT STAIR SHAFTS ARE REQUIRED TO BE SEPARATED FROM THE EXIT STAIR BY A 2 HR. FIRE SEPARATION.
11) NO FLEXIBLE DUCT SHALL BE USED FOR ANY IN-SUITE DUCTWORK.
12) PROVIDE 25MM EXTERNAL INSULATION TO ENTIRE FRESH AIR DUCT FROM EXTERIOR WALL TO ERV FAN COIL UNIT.
13) DRYER EXHAUST DUCT SHALL BE SMOOTH AND CORROSION-RESISTANT MATERIAL (FLEXIBLE CONNECTION IS NOT ACCEPTABLE).

REFER TO DWG. M-X FOR ACOUSTIC NOTES

⚠ 2750mm CLEAR FLOOR TO UNDERSLAB

NOTES:

1. SOUTH F/A SHAFT A FROM G/F TO 8/F DUCT SERVING CORRIDOR FROM G/F TO 8/F. SEE VENTILATION RISER DIAGRAM FOR DETAILS.
2. SOUTH F/A SHAFT B FROM G/F TO 14/F. F/A DUCT SERVING CORRIDOR FROM 9/F TO 14/F. SEE VENTILATION RISER DIAGRAM FOR DETAILS.
3. PIPE SHAFT - REFER TO PIPE RISER DETAIL ON THIS DRAWING FOR DETAILS.
4. 150ø KITCHEN / DRYER / W/R / FCU INTAKE / FCU EXHAUST DUCT. (TYPICAL UNLESS OTHERWISE NOTED)

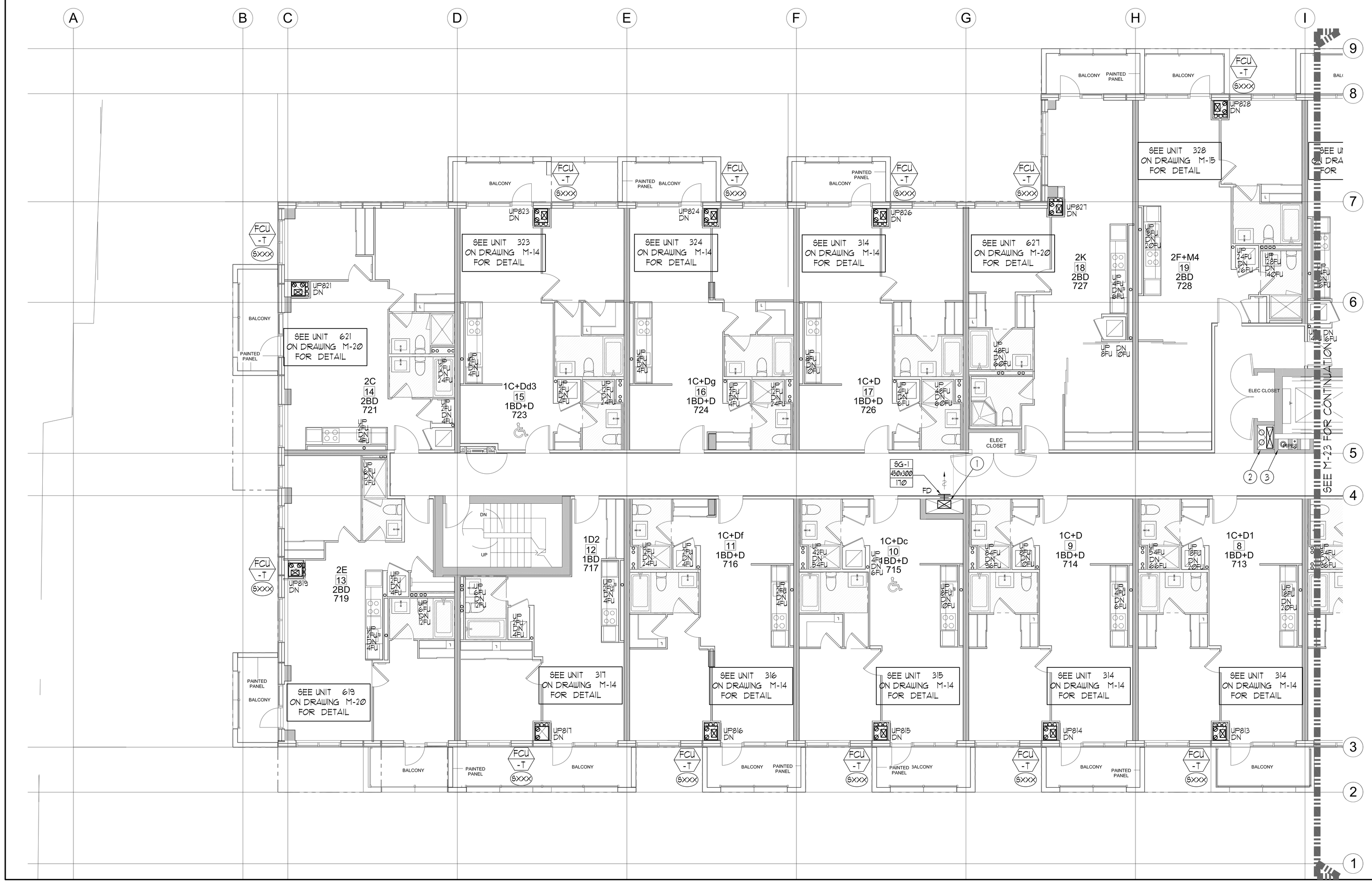

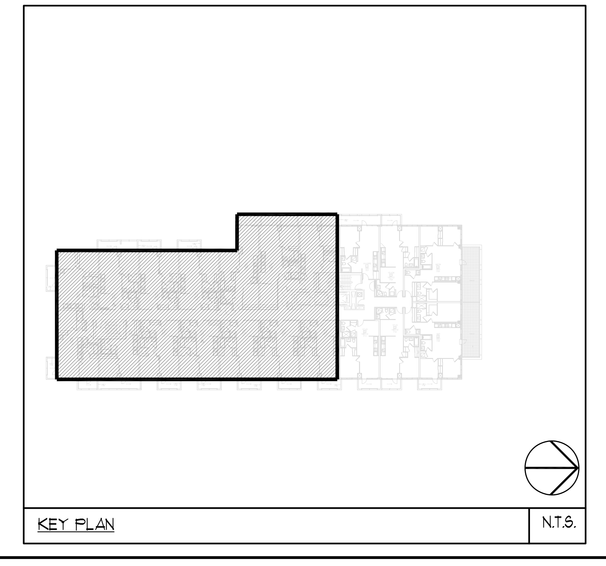

KEY PLAN — N.T.S.

LEGEND MECHANICAL

SYMBOL	DESCRIPTION
	SUPPLY AIR DIFFUSER
	SUPPLY AIR TROFFER
	LINEAR SUPPLY DIFFUSER
T	THERMOSTAT
S	FAN SWITCH
	RETURN AIR GRILLE
	EXHAUST AIR GRILLE
	SUPPLY DUCT UP
	SUPPLY DUCT DOWN
	RETURN DUCT UP
	RETURN DUCT DOWN
	EXHAUST DUCT UP
	EXHAUST DUCT DOWN
FD	FIRE DAMPER
BD	BALANCING DAMPER
MD	MOTORIZED DAMPER
MFD	MOTORIZED FIRE DAMPER
BDD	BACKDRAFT DAMPER
OBD	OPPOSED BLADE VOLUME CONTROL DAMPER C/W LOCKING QUADRANT
	TURNING VANES
	FLEXIBLE CONNECTION
	ACOUSTIC INSULATION
XX	TYPE OF EQUIPMENT / EQUIPMENT IDENTIFICATION
XXX / XXX	TYPE OF DIFFUSER OR GRILLE / GRILLE SIZE OR DIFFUSER NECK SIZE
XXX / XXX	AIRFLOW CFM OR L/s
M	STARTER (3 PHASE , 1 PHASE)
S	IN-SUITE ERV MASTER SWITCH
S	FAN SWITCH / IN-SUITE ERV OVERRIDE BUTTON
CO	CO SENSOR
G	GAS LINE
G	GAS METER
S	GAS COCK
PR	PRESSURE REDUCING VALVE
	SANITARY ABOVE GRADE
	SANITARY BELOW GRADE
	STORM ABOVE GRADE
	STORM BELOW GRADE
	DOMESTIC COLD WATER
	DOMESTIC HOT WATER
	DOMESTIC HOT WATER RECIRCULATION
	SANITARY VENT
	WATER METER
FD	FLOOR DRAIN
FFD	FUNNEL FLOOR DRAIN
HD	HUB DRAIN
RD	ROOF DRAIN
BLD	BLAB DRAIN
AD	AREA DRAIN
BLAD	BI-LEVEL AREA DRAIN
CB	CATCH BASIN
	SANITARY TRAP
	ELBOW UP
	ELBOW DOWN
CO	WALL CLEANOUT
CO	FLOOR CLEANOUT
HB	HOSE BIBB
NFHB	NON-FREEZE HOSE BIBB
	GLOBE VALVE
	GATE VALVE
	BALL VALVE
	BUTTERFLY VALVE
	PRESSURE REDUCING VALVE
	CHECK VALVE
	CAP
	COMPRESSED AIR OUTLET
NI	BACKFLOW PREVENTER
	CIRCUIT BALANCING VALVE
	MULTIPLE PIPES / - DENOTES NO. OF PIPES
T	TEMPERATURE SENSOR
T	THERMOMETER
	2-WAY MODULATING VALVE
	3-WAY MODULATING VALVE
	1/1"x4"(1) THERMOWELL C/W 1/2" BUSHING + 1/2" PLUG
XXX	FLOOR ELEVATION (ABOVE LEVEL)
XXX	FLOOR ELEVATION THIS LEVEL
XXX	HEADROOM (FLOOR TO U/S HEIGHT)

PRIORITY		ISSUED FOR ---	E.P.
DATE	NO.	DESCRIPTION	BY

MARK VOID ALL PRINTS DATED PREVIOUS TO FINAL DATE ABOVE

REVISIONS

CONTRACTOR MUST CHECK AND VERIFY ALL DIMENSIONS AND CONDITIONS ON THE JOB AND REPORT DISCREPANCIES TO THE ENGINEER BEFORE PROCEEDING WITH WORK. DRAWINGS AND SPECIFICATIONS ARE THE ENGINEERS AND MUST BE RETURNED UPON COMPLETION OF THE WORK.

DRAWINGS ARE NOT TO BE SCALED

NOVA TREND ENGINEERING SERVICES INC.
115 West Beaver Creek Road, Unit 31
Richmond Hill, Ontario L4B 3M1
Tel: 905 882-9445
Fax: 905 882-9441
Email: cad@novatrending.com

DRAWING TITLE: 7/F SOUTH MECHANICAL LAYOUT

PROJECT TITLE: ALEXANDRA PARK
XXX
TORONTO ONTARIO

DRAWN BY:	CHECKED BY:	SCALE:
G.S.	E.P.	1:50
DATE: FEB. 13	PROJECT NUMBER: 1313	DRAWING NUMBER: M-22 OF 99

Drawing name: \\CADSERVER\Current Dwg\1313\1313 - Alexandra Park\2d\15\1313M- 22.2D7F PLAN - SOUTH & NORTH MECHANICAL LAYOUT.dwg Plotted: Mar 12, 2014 - 3:42pm

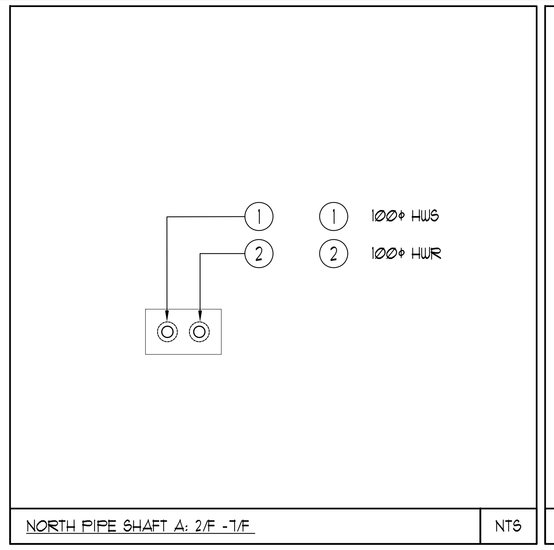

NORTH PIPE SHAFT A: 2/F -T/F | NTS

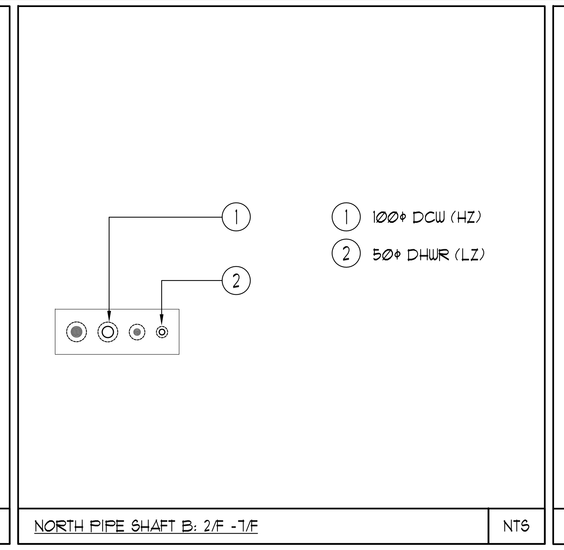

NORTH PIPE SHAFT B: 2/F -T/F | NTS

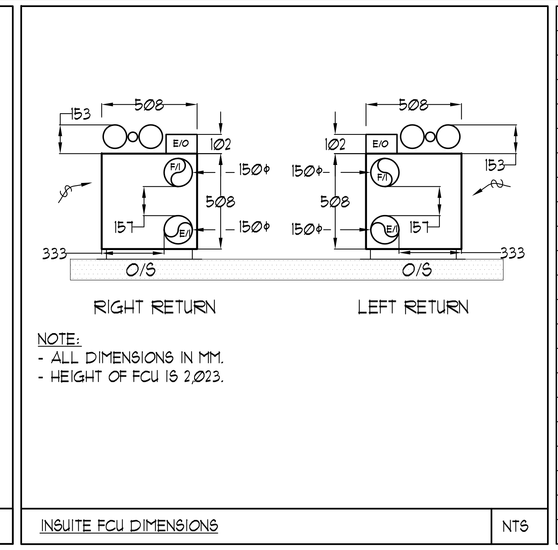

NOTE:
- ALL DIMENSIONS IN MM.
- HEIGHT OF FCU IS 2,023.

INSUITE FCU DIMENSIONS | NTS

UNIT	NAME	AREA (SQ. FT.)	# OF WR	# OF POWDER	SIZE (T)	FIXTURE UNITS	BR	SQ. FT/T

GRILLE SIZING TABLE			
DESIGNATION	SIZE	L/S	*(UNLESS SPECIFIED ELSEWHERE)
SG-A	300x100	47-70	
SG-B	300x150	71-93	
SG-C	400x150	94-140	
SG-D	450x150	141-188	
EG-A	150x150	35	
W-1	225x200	210mm(L)	
W-2	425x200	INSULATED	
W-3	625x200	WALL BOX	

VERTICAL FAN COIL SIZE		
DESIGNATION	MODEL	W x D
FCU-1T	450	500x660
FCU-1.5T	600	500x660
FCU-2T	800	500x660
FCU-2.5T	1000	559x660
FCU-3T	1200	559x660

NOTE:
A MIN. OF 125mm IS REQUIRED ON THE SIDE OF PIPE RISER.

DUCT SIZING TABLE (4.06 m/s, 800 FPM)					
DESIGNATION	L/s	DUCT SIZE	DESIGNATION	L/s	DUCT SIZE
A	47	100x150	G	189	350x150
B	71	150x150	H	236	450x150
C	94	200x150	J	283	500x150
D	118	200x150	K	330	600x150
E	141	250x150	L	377	500x200
F	165	300x150			

GENERAL NOTES:

1) CONTRACTOR SHALL CO-ORDINATE ARCHITECTURAL, STRUCTURAL, LIGHTING, HVAC, SPRINKLER DRAWINGS TO AVOID AREAS OF CONFLICT AND TO MAINTAIN CEILING HEIGHTS.

2) CONTRACTOR SHALL REPORT ALL DISCREPANCIES AND AREA OF CONFLICTS TO THE ENGINEER PRIOR TO WORK BEGINS.

3) PROVIDE EXPANSION CHAMBERS FOR ALL KITCHEN SINKS.

4) SEE INSTALLATION DETAILS DRAWING FOR WASHER DOM. H+C WATER, SANITARY CONNECTION DETAILS.

5) SUPPLY AND INSTALL COMPLETE DOMESTIC HOT AND COLD WATER LINES, SANITARY AND VENT LINES TO EACH FIXTURE /EQUIPMENT INCLUDING WATER CLOSETS, LAVATORIES, BATHS, SHOWERS, KITCHEN SINK, WASHING MACHINES, DISHWASHERS, AND FLOOR DRAINS. KITCHEN SINK, LAVATORIES, WATER CLOSETS AND WASHING MACHINE TO BE C/W LOCALIZED SHUT-OFF VALVES.

6) ALL VENT PIPE INSTALLATION TO COMPLY WITH PLUMBING CODES.

7) FOR D.H.C. W. RISER SIZES, REFER TO RISER DIAGRAM

8) FIRE DAMPERS ARE REQUIRED TO BE LISTED AND ARE TO HAVE FIRE PROTECTION RATING OF THE PENETRATED FIRE SEPARATION.

9) THE PIPING PENETRATING THE VARIOUS FIRE SEPARATION IS REQUIRED TO BE FIRESTOPPED WITH A LISTED FIRESTOPPING MATERIAL IN ACCORDANCE WITH OBC ARTICLE 3.1.9.1

10) THE FIRE HOSE CABINET THAT ARE RECESSED INTO THE EXIT STAIR SHAFTS ARE REQUIRED TO BE SEPARATED FROM THE EXIT STAIR BY A 2 HR. FIRE SEPARATION.

11) NO FLEXIBLE DUCT SHALL BE USED FOR ANY IN-SUITE DUCTWORK.

12) PROVIDE 25MM EXTERNAL INSULATION TO ENTIRE FRESH AIR DUCT FROM EXTERIOR WALL TO ERV FAN COIL UNIT.

13) DRYER EXHAUST DUCT SHALL BE SMOOTH AND CORROSION-RESISTANT MATERIAL (FLEXIBLE CONNECTION IS NOT ACCEPTABLE).

REFER TO DWG. M-X FOR ACOUSTIC NOTES

2750mm CLEAR FLOOR TO UNDERSLAB

NOTES:

1. NORTH F/A SHAFT SERVING FROM G/F TO 14/F. F/A DUCT SERVING CORRIDOR FROM G/F TO 14/F. SEE VENTILATION RISER DIAGRAM FOR DETAILS.
2. PIPE SHAFT - REFER TO PIPE RISER DETAIL ON THIS DRAWING FOR DETAILS.
3. 150ø KITCHEN / DRYER / W/R / FCU INTAKE / FCU EXHAUST DUCT. (TYPICAL UNLESS OTHERWISE NOTED)

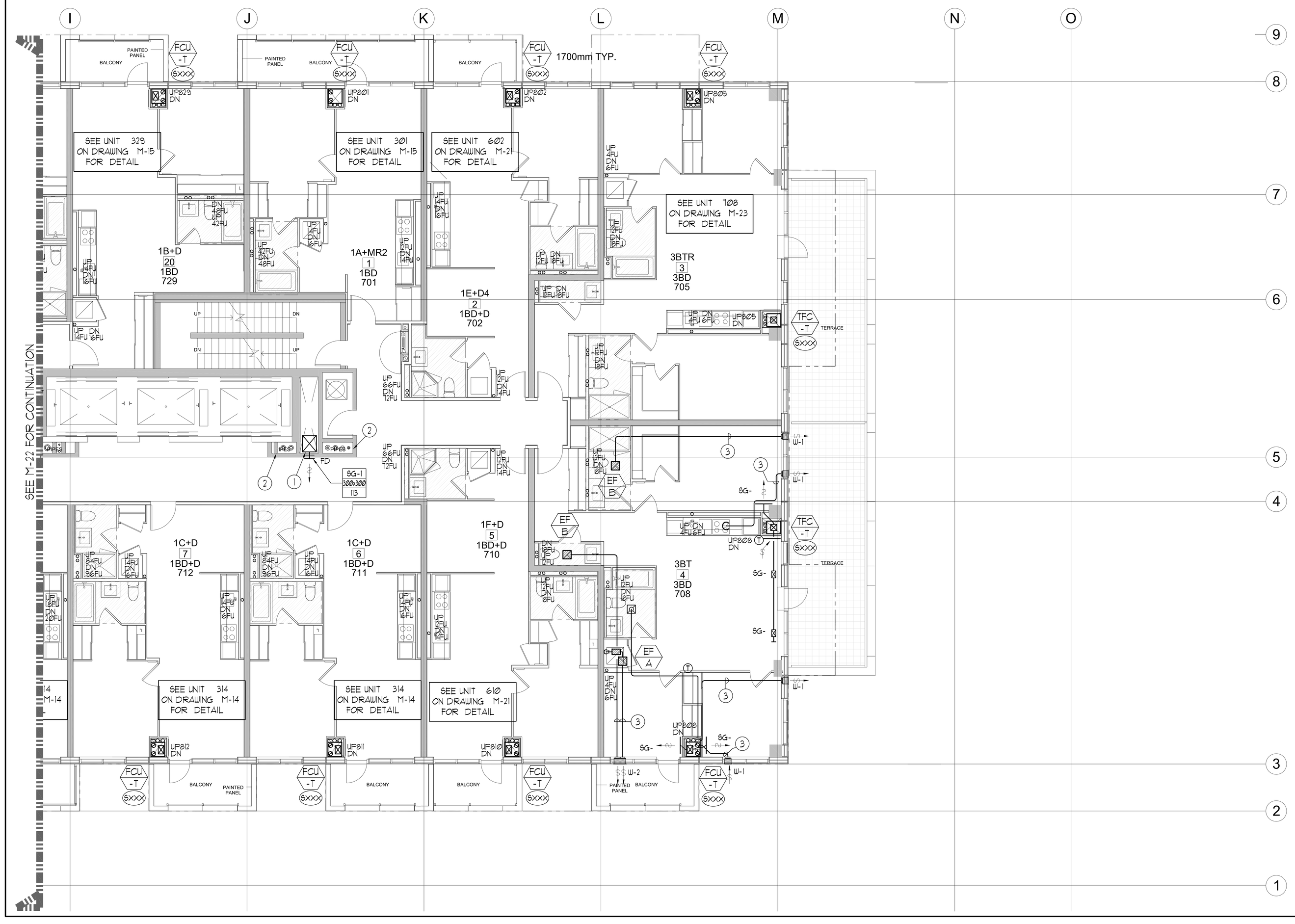

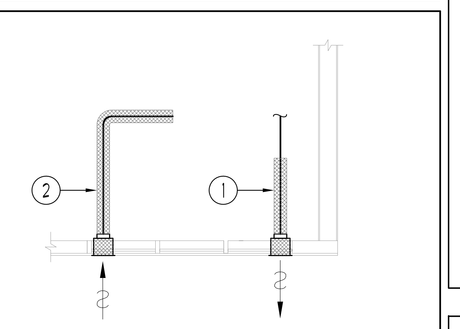

1. EXHAUST DUCTWORK TO BE C/W 1" THICK THERMAL INSULATION 6FT. FROM EXTERNAL WALL. (TYPICAL)
2. F/A INTAKE DUCTWORK TO BE C/W 1" THICK THERMAL INSULATION FOR ENTIRE LENGTH FROM EXTERIOR WALL TO ERV FCU. (TYPICAL)

TYPICAL DETAIL:INSULATION FOR INTAKE/EXHAUST DUCTWORK | NTS

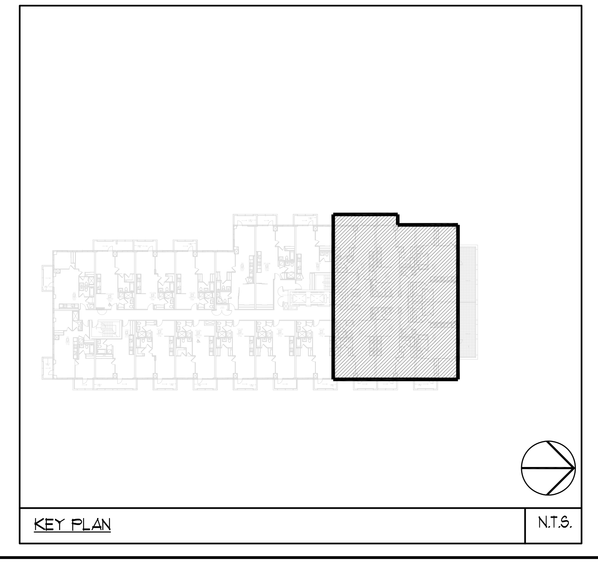

KEY PLAN | N.T.S.

LEGEND
MECHANICAL

SYMBOL	DESCRIPTION
	SUPPLY AIR DIFFUSER
	SUPPLY AIR TROFFER
	LINEAR SUPPLY DIFFUSER
T	THERMOSTAT
S	FAN SWITCH
	RETURN AIR GRILLE
	EXHAUST AIR GRILLE
	SUPPLY DUCT UP
	SUPPLY DUCT DOWN
	RETURN DUCT UP
	RETURN DUCT DOWN
	EXHAUST DUCT UP
	EXHAUST DUCT DOWN
FD	FIRE DAMPER
BD	BALANCING DAMPER
MD	MOTORIZED DAMPER
MFD	MOTORIZED FIRE DAMPER
BDD	BACKDRAFT DAMPER
OBD	OPPOSED BLADE VOLUME CONTROL DAMPER C/W LOCKING QUADRANT
	TURNING VANES
	FLEXIBLE CONNECTION
	ACOUSTIC INSULATION
XX	-TYPE OF EQUIPMENT -EQUIPMENT IDENTIFICATION
XXX	-TYPE OF DIFFUSER OR GRILLE
XXX	-GRILLE SIZE OR DIFFUSER NECK SIZE
XXX	-AIRFLOW (CFM OR L/S)
XX, Y	STARTER (3 PHASE , 1 PHASE)
S	IN-SUITE ERV MASTER SWITCH
S	FAN SWITCH / IN-SUITE ERV OVERRIDE BUTTON
CO	CO SENSOR
G	GAS LINE
G	GAS METER
G	GAS COCK
PR	PRESSURE REDUCING VALVE
	SANITARY ABOVE GRADE
	SANITARY BELOW GRADE
	STORM ABOVE GRADE
	STORM BELOW GRADE
	DOMESTIC COLD WATER
	DOMESTIC HOT WATER
	DOMESTIC HOT WATER RECIRCULATION
V	SANITARY VENT
	WATER METER
FD	FLOOR DRAIN
FFD	FUNNEL FLOOR DRAIN
HD	HUB DRAIN
RD	ROOF DRAIN
BLD	BLAB DRAIN
AD	AREA DRAIN
BLAD	BI-LEVEL AREA DRAIN
CB	CATCH BASIN
	SANITARY TRAP
	ELBOW UP
	ELBOW DOWN
CO	WALL CLEANOUT
CO	FLOOR CLEANOUT
HB	HOSE BIBB
NFHB	NON-FREEZE HOSE BIBB
	GLOBE VALVE
	GATE VALVE
	BALL VALVE
	BUTTERFLY VALVE
	PRESSURE REDUCING VALVE
	CHECK VALVE
	CAP
	COMPRESSED AIR OUTLET
N	BACKFLOW PREVENTER
	CIRCUIT BALANCING VALVE
	MULTIPLE PIPES / - DENOTES NO. OF PIPES
T	TEMPERATURE SENSOR
T	THERMOSTER
	2-WAY MODULATING VALVE
	3-WAY MODULATING VALVE
	1/2"x4"(1) THERMOWELL C/W 1/2" BUSHING x 1/2" PLUG
XXX	FLOOR ELEVATION ABOVE LEVEL
XXX	FLOOR ELEVATION THIS LEVEL
XXX	HEADROOM (FLOOR TO U/S HEIGHT)

PRIORITY	1	ISSUED FOR ----	E.P.
DATE	NO.	DESCRIPTION	BY

THANK YOU ALL PRINTS DATED PREVIOUS TO FINAL DATE ABOVE

REVISIONS

CONTRACTOR MUST CHECK AND VERIFY ALL DIMENSIONS AND CONDITIONS ON THE JOB AND REPORT DISCREPANCIES TO THE ENGINEERS BEFORE PROCEEDING WITH THE WORK. THIS DRAWING IS THE PROPERTY OF THE ENGINEERS AND MUST BE RETURNED UPON COMPLETION OF THE WORK.

DRAWINGS ARE NOT TO BE SCALED

NOVA TREND ENGINEERING GROUP LTD.

113 West Beaver Creek Road, Unit 31
Richmond Hill, Ontario L4B 3M1
Tel: 905 882-5445
Fax: 905 882-5447
Email: cad@novatrendeng.com

DRAWING TITLE
1/F NORTH
MECHANICAL LAYOUT

PROJECT TITLE
ALEXANDRA PARK

XXX
TORONTO ONTARIO

DRAWN BY:	CHECKED BY:	SCALE:
G.S.	E.P.	1:50
DATE: FEB. 13	PROJECT NUMBER: 1313	DRAWING NUMBER: M-23 OF 35

Drawing name: \\CADSERVER\Current Dwg's\1313 - Alexandra Park\DWG's\1313M - 22.22'0" FLOR - SOUTH & NORTH MECHANICAL LAYOUT.dwg Plotted: Mar 12, 2014 - 3:42pm

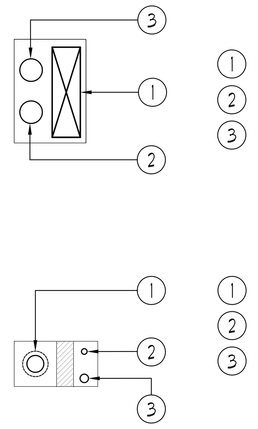

SOUTH PIPE SHAFT: B/F — NTS

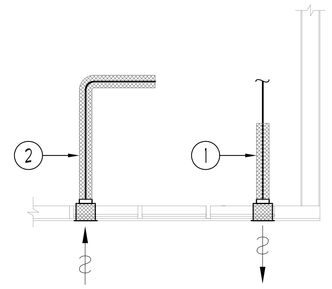

1. EXHAUST DUCTWORK TO BE C/W 1" THICK THERMAL INSULATION 6FT. FROM EXTERNAL WALL. (TYPICAL)
2. F/A INTAKE DUCTWORK TO BE C/W 1" THICK THERMAL INSULATION FOR ENTIRE LENGTH FROM EXTERIOR WALL TO ERV FCU. (TYPICAL)

TYPICAL DETAIL: INSULATION FOR INTAKE & EXHAUST DUCTWORK — NTS

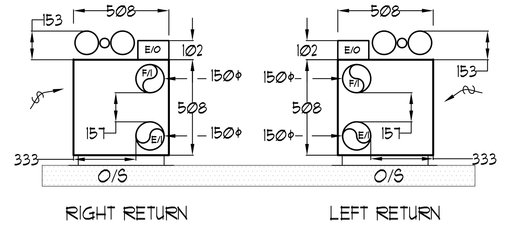

NOTE:
- ALL DIMENSIONS IN MM.
- HEIGHT OF FCU IS 2,073.

INSUITE FCU DIMENSIONS — NTS

UNIT	NAME	AREA (SQ. FT.)	# OF WR	# OF POWDER	SIZE (T)	FIXTURE UNITS	BR	SQ. FT./T

GRILLE SIZING TABLE		
DESIGNATION	SIZE	L/S (UNLESS SPECIFIED ELSEWHERE)
SG-A	300x100	47-70
SG-B	300x150	71-93
SG-C	400x150	94-140
SG-D	450x150	141-188
EG-A	150x150	35
W-1	225x200	210mm(L)
W-2	425x200	INSULATED
W-3	625x200	WALL BOX

VERTICAL FAN COIL SIZE		
DESIGNATION	MODEL	W x D
FCU-1T	450	500x660
FCU-1.5T	600	500x660
FCU-2T	800	500x660
FCU-2.5T	1000	559x660
FCU-3T	1200	559x660

NOTE:
A MIN. OF 125mm IS REQUIRED ON THE SIDE OF PIPE RISER.

DUCT SIZING TABLE (4.06 m/s, 800 FPM)					
DESIGNATION	L/s	DUCT SIZE	DESIGNATION	L/s	DUCT SIZE
A	47	100x150	G	189	350x150
B	71	150x150	H	236	450x150
C	94	200x150	J	283	500x150
D	118	200x150	K	330	600x150
E	141	250x150	L	377	500x200
F	165	300x150			

ACOUSTIC NOTES:

FOR FLOORS WITH ERVS:

XX) ERVS SHALL BE ISOLATED USING ISOLATORS INCORPORATING BOTH A SPRING ELEMENT AND A SECONDARY NEOPRENE-IN-SHEAR ELEMENT IN SERIES. DUCTWORK SHALL BE DE-COUPLED FROM FAN BY FLEXIBLE CONNECTORS. ASSOCIATED DUCTWORK SHALL BE SUSPENDED ON HANGERS WITH NEOPRENE PADS.

FOR TRANSITION FLOORS:

XX) ALL HORIZONTAL SUPPLY AIR DUCTWORK SHALL BE C/W 25MM INTERNAL ACOUSTIC LINING AND SHALL BE SUSPENDED ON RUBBER PADS IN THE HANGERS. ELBOWS SHALL BE COMPLETE WITH TURNING VANES.

XX) ALL SYSTEM/DOMESTIC PIPE LOOPS OR OFFSETS WHICH ARE LARGER THAN 75 MM SHALL BE ISOLATED USING NEOPRENE-IN-SHEAR HANGERS, AND ADDITIONAL 25 MM THICK RIBBED OR WAFFLED NEOPRENE PADS IN THE SADDLES OF CLEVIS HANGERS.

12) ALL PIPES 50MM DIA. AND SMALLER SHALL BE ISOLATED WITH NEOPRENE PADS.

GENERAL NOTES:

1) CONTRACTOR SHALL CO-ORDINATE ARCHITECTURAL, STRUCTURAL, LIGHTING, HVAC, SPRINKLER DRAWINGS TO AVOID AREAS OF CONFLICT AND TO MAINTAIN CEILING HEIGHTS.
2) CONTRACTOR SHALL REPORT ALL DISCREPANCIES AND AREA OF CONFLICTS TO THE ENGINEER PRIOR TO WORK BEGINS.
3) PROVIDE EXPANSION CHAMBERS FOR ALL KITCHEN SINKS.
4) SEE INSTALLATION DETAILS DRAWING FOR WASHER DOM. H+C WATER, SANITARY CONNECTION DETAILS.
5) SUPPLY AND INSTALL COMPLETE DOMESTIC HOT AND COLD WATER LINES, SANITARY AND VENT LINES TO EACH FIXTURE /EQUIPMENT INCLUDING WATER CLOSETS, LAVATORIES, BATHS, SHOWERS, KITCHEN SINK, WASHING MACHINES, DISHWASHERS, AND FLOOR DRAINS. KITCHEN SINK, LAVATORIES, WATER CLOSETS AND WASHING MACHINE TO BE C/W LOCALIZED SHUT-OFF VALVES.
6) ALL VENT PIPE INSTALLATION TO COMPLY WITH PLUMBING CODES.
7) FOR D.H.C. W. RISER SIZES, REFER TO RISER DIAGRAM
8) FIRE DAMPERS ARE REQUIRED TO BE LISTED AND ARE TO HAVE FIRE PROTECTION RATING OF THE PENETRATED FIRE SEPARATION.
9) THE PIPING PENETRATING THE VARIOUS FIRE SEPARATION IS REQUIRED TO BE FIRESTOPPED WITH A LISTED FIRESTOPPING MATERIAL IN ACCORDANCE WITH OBC ARTICLE 3.1.9.)
10) THE FIRE HOSE CABINET THAT ARE RECESSED INTO THE EXIT STAIR SHAFTS ARE REQUIRED TO BE SEPARATED FROM THE EXIT STAIR BY A 2 HR. FIRE SEPARATION.
11) NO FLEXIBLE DUCT SHALL BE USED FOR ANY IN-SUITE DUCTWORK.
12) PROVIDE 25MM EXTERNAL INSULATION TO ENTIRE FRESH AIR DUCT FROM EXTERIOR WALL TO ERV FAN COIL UNIT.
13) DRYER EXHAUST DUCT SHALL BE SMOOTH AND CORROSION-RESISTANT MATERIAL (FLEXIBLE CONNECTION IS NOT ACCEPTABLE).

3050mm CLEAR FLOOR TO UNDERSLAB

NOTES:

1. SOUTH F/A SHAFT A FROM G/F TO B/F DUCT SERVING CORRIDOR FROM G/F TO B/F. SEE VENTILATION RISER DIAGRAM FOR DETAILS.
2. SOUTH F/A SHAFT B FROM G/F TO 14/F. F/A DUCT SERVING CORRIDOR FROM 9/F TO 14/F. SEE VENTILATION RISER DIAGRAM FOR DETAILS.
3. PIPE SHAFT - REFER TO PIPE RISER DETAIL ON THIS DRAWING FOR DETAILS.
4. 150ø KITCHEN / DRYER / W/R / FCU INTAKE / FCU EXHAUST DUCT. (TYPICAL UNLESS OTHERWISE NOTED)

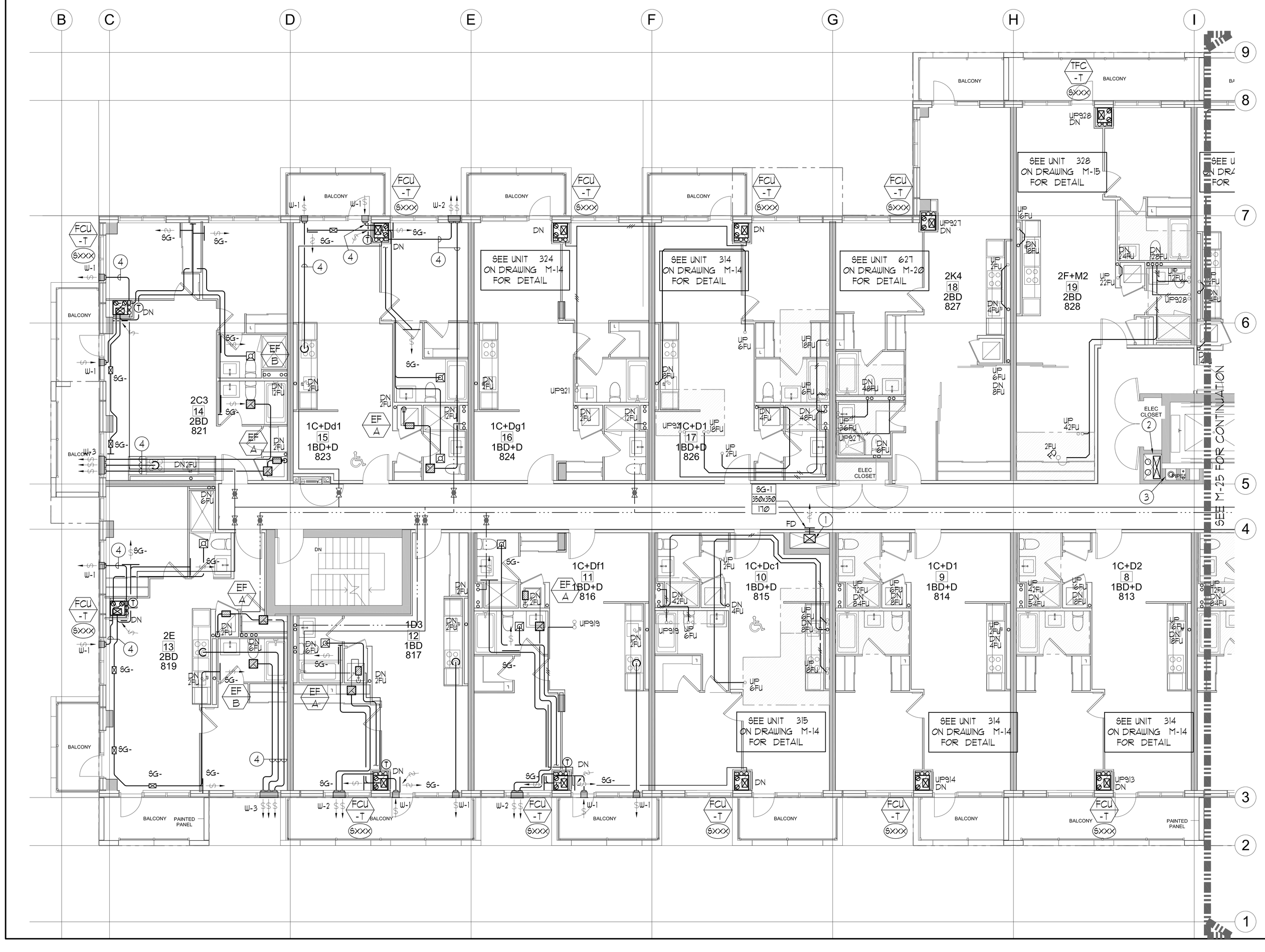

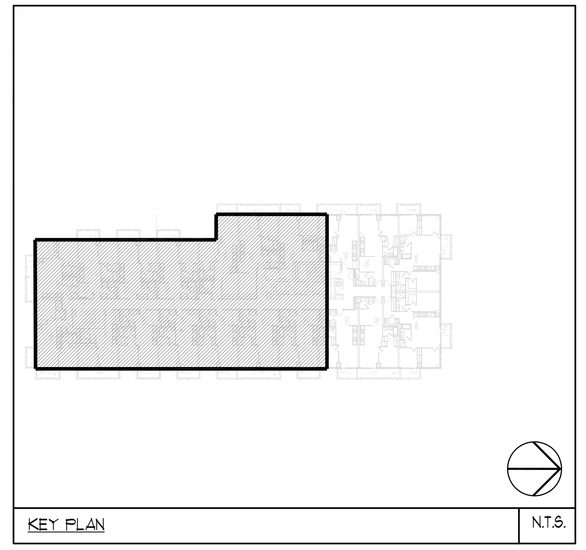

KEY PLAN — N.T.S.

LEGEND MECHANICAL

SYMBOL	DESCRIPTION
	SUPPLY AIR DIFFUSER
	SUPPLY AIR TROFFER
	LINEAR SUPPLY DIFFUSER
T	THERMOSTAT
S	FAN SWITCH
	RETURN AIR GRILLE
	EXHAUST AIR GRILLE
	SUPPLY DUCT UP
	SUPPLY DUCT DOWN
	RETURN DUCT UP
	RETURN DUCT DOWN
	EXHAUST DUCT UP
	EXHAUST DUCT DOWN
FD	FIRE DAMPER
BD	BALANCING DAMPER
MD	MOTORIZED DAMPER
MFD	MOTORIZED FIRE DAMPER
BDD	BACKDRAFT DAMPER
OBD	OPPOSED BLADE VOLUME CONTROL DAMPER C/W LOCKING QUADRANT
	TURNING VANES
	FLEXIBLE CONNECTION
	ACOUSTIC INSULATION
XX	-TYPE OF EQUIPMENT -EQUIPMENT IDENTIFICATION
XXX XXX XXX	-TYPE OF DIFFUSER OR GRILLE -GRILLE SIZE OR DIFFUSER NECK SIZE -AIRFLOW CFM OR L/S
XX XX	STARTER (3 PHASE , 1 PHASE)
S	IN-SUITE ERV PASTER SWITCH
S	FAN SWITCH / IN-SUITE ERV OVERRIDE BUTTON
CO	CO SENSOR
G	GAS LINE
G	GAS METER
G	GAS COCK
PR	PRESSURE REDUCING VALVE
	SANITARY ABOVE GRADE
	SANITARY BELOW GRADE
	STORM ABOVE GRADE
	STORM BELOW GRADE
	DOMESTIC COLD WATER
	DOMESTIC HOT WATER
	DOMESTIC HOT WATER RECIRCULATION
	SANITARY VENT
	WATER METER
FD	FLOOR DRAIN
FFD	FUNNEL FLOOR DRAIN
HD	HUB DRAIN
RD	ROOF DRAIN
BLD	BLAB DRAIN
AD	AREA DRAIN
BLAD	BI-LEVEL AREA DRAIN
CB	CATCH BASIN
	SANITARY TRAP
	ELBOW UP
	ELBOW DOWN
CO	WALL CLEANOUT
CO	FLOOR CLEANOUT
HB	HOSE BIBB
NFHB	NON-FREEZE HOSE BIBB
	GLOBE VALVE
	GATE VALVE
	BALL VALVE
	BUTTERFLY VALVE
	PRESSURE REDUCING VALVE
	CHECK VALVE
	CAP
	COMPRESSED AIR OUTLET
	BACKFLOW PREVENTER
	CIRCUIT BALANCING VALVE
	MULTIPLE PIPES / - DENOTES NO. OF PIPES
T	TEMPERATURE SENSOR
T	THERMOMETER
	2-WAY MODULATING VALVE
	3-WAY MODULATING VALVE
	1/2"x4"O.D THERMOWELL C/W 1/2" BUSHING X 1/2" PLUG
XXX	-FLOOR ELEVATION ABOVE LEVEL
XXX	-FLOOR ELEVATION THIS LEVEL
XXX	-HEADROOM (FLOOR TO U/S HEIGHT)

PRIORITY	DATE	NO.	DESCRIPTION	BY
		1	ISSUED FOR ---	E.P.

MARK VOID ALL PRINTS DATED PREVIOUS TO FINAL DATE ABOVE

REVISIONS

CONTRACTOR MUST CHECK AND VERIFY ALL DIMENSIONS AND CONDITIONS ON THE JOB AND REPORT DISCREPANCIES TO THE ENGINEERS BEFORE PROCEEDING WITH THE WORK. THIS DRAWING IS THE PROPERTY OF THE ENGINEERS AND MUST BE RETURNED UPON COMPLETION OF THE WORK.

DRAWINGS ARE NOT TO BE SCALED

NOVA TREND DEVELOPMENT
179 West Beaver Creek Road, Unit 31
Richmond Hill, Ontario L4B 3M1
Tel: 905 882-5445
Fax: 905 882-5447
Email: cad@novatrendeng.com

DRAWING TITLE: 8/F SOUTH MECHANICAL LAYOUT

PROJECT TITLE: ALEXANDRA PARK
XXX
TORONTO ONTARIO

DRAWN BY:	CHECKED BY:	SCALE:
G.S.	E.P.	1:50
DATE: FEB, 13	PROJECT NUMBER: 1313	DRAWING NUMBER: M-24 OF 35

Drawing name: \\CADSERVER\Current Dwg\1313\1313 - Alexandra Park\SHP\1313M- 24-25DF PLAN - SOUTH & NORTH MECHANICAL LAYOUT.dwg Plotted: Mar 12, 2014 - 3:43pm

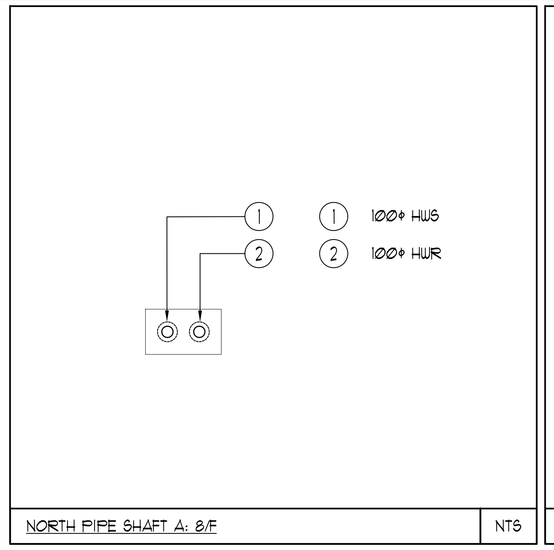

NORTH PIPE SHAFT A: B/F — NTS

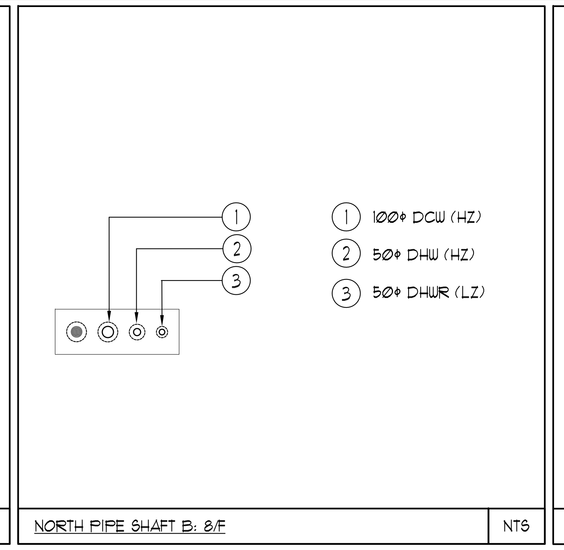

NORTH PIPE SHAFT B: B/F — NTS

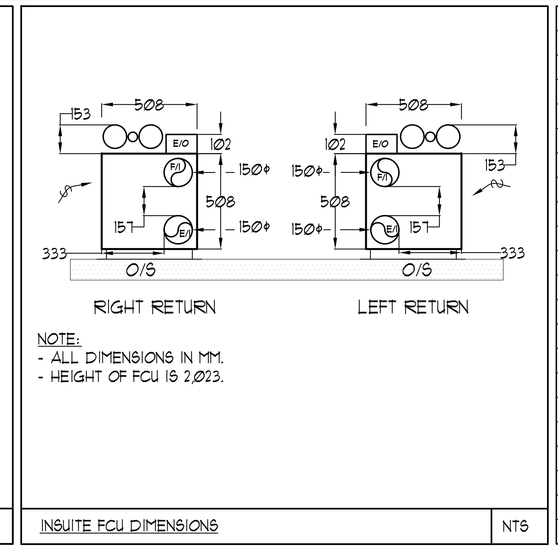

NOTE:
- ALL DIMENSIONS IN MM.
- HEIGHT OF FCU IS 2,023.

INSUITE FCU DIMENSIONS — NTS

UNIT	NAME	AREA (SQ. FT.)	# OF WR	# OF POWDER	SIZE (T)	FIXTURE UNITS	BR	SQ. FT/T

GRILLE SIZING TABLE

DESIGNATION	SIZE	L/S (*PLESS SPECIFIED ELSEWHERE)
SG-A	300x100	47-70
SG-B	300x150	71-93
SG-C	400x150	94-140
SG-D	450x150	141-188
EG-A	150x150	35
W-1	225x200	210mm(L)
W-2	425x200	INSULATED
W-3	625x200	WALL BOX

VERTICAL FAN COIL SIZE

DESIGNATION	MODEL	W x D
FCU-1T	450	500x660
FCU-1.5T	600	500x660
FCU-2T	800	500x660
FCU-2.5T	1000	559x660
FCU-3T	1200	559x660

NOTE:
A MIN. OF 125mm IS REQUIRED ON THE SIDE OF PIPE RISER.

DUCT SIZING TABLE
(4.06 m/s, 800 FPM)

DESIGNATION	L/s	DUCT SIZE	DESIGNATION	L/s	DUCT SIZE
A	47	100x150	G	189	350x150
B	71	150x150	H	236	450x150
C	94	200x150	J	283	500x150
D	118	200x150	K	330	600x150
E	141	250x150	L	377	500x200
F	165	300x150			

GENERAL NOTES:

1) CONTRACTOR SHALL CO-ORDINATE ARCHITECTURAL, STRUCTURAL, LIGHTING, HVAC, SPRINKLER DRAWINGS TO AVOID AREAS OF CONFLICT AND TO MAINTAIN CEILING HEIGHTS.

2) CONTRACTOR SHALL REPORT ALL DISCREPANCIES AND AREA OF CONFLICTS TO THE ENGINEER PRIOR TO WORK BEGINS.

3) PROVIDE EXPANSION CHAMBERS FOR ALL KITCHEN SINKS.

4) SEE INSTALLATION DETAILS DRAWING FOR WASHER DOM. H+C WATER, SANITARY CONNECTION DETAILS.

5) SUPPLY AND INSTALL COMPLETE DOMESTIC HOT AND COLD WATER LINES, SANITARY AND VENT LINES TO EACH FIXTURE /EQUIPMENT INCLUDING WATER CLOSETS, LAVATORIES, BATHS, SHOWERS, KITCHEN SINK, WASHING MACHINES, DISHWASHERS, AND FLOOR DRAINS. KITCHEN SINK, LAVATORIES, WATER CLOSETS AND WASHING MACHINE TO BE C/W LOCALIZED SHUT-OFF VALVES.

6) ALL VENT PIPE INSTALLATION TO COMPLY WITH PLUMBING CODES.

7) FOR D.H.C. W. RISER SIZES, REFER TO RISER DIAGRAM

8) FIRE DAMPERS ARE REQUIRED TO BE LISTED AND ARE TO HAVE FIRE PROTECTION RATING OF THE PENETRATED FIRE SEPARATION.

9) THE PIPING PENETRATING THE VARIOUS FIRE SEPARATION IS REQUIRED TO BE FIRESTOPPED WITH A LISTED FIRESTOPPING MATERIAL IN ACCORDANCE WITH OBC ARTICLE 3.1.9.1

10) THE FIRE HOSE CABINET THAT ARE RECESSED INTO THE EXIT STAIR SHAFTS ARE REQUIRED TO BE SEPARATED FROM THE EXIT STAIR BY A 2 HR. FIRE SEPARATION.

11) NO FLEXIBLE DUCT SHALL BE USED FOR ANY IN-SUITE DUCTWORK.

12) PROVIDE 25MM EXTERNAL INSULATION TO ENTIRE FRESH AIR DUCT FROM EXTERIOR WALL TO ERV FAN COIL UNIT.

13) DRYER EXHAUST DUCT SHALL BE SMOOTH AND CORROSION-RESISTANT MATERIAL (FLEXIBLE CONNECTION IS NOT ACCEPTABLE).

△ 3050mm CLEAR FLOOR TO UNDERSLAB

NOTES:

1. NORTH F/A SHAFT SERVING FROM G/F TO 14/F. F/A DUCT SERVING CORRIDOR FROM G/F TO 14/F. SEE VENTILATION RISER DIAGRAM FOR DETAILS.
2. PIPE SHAFT - REFER TO PIPE RISER DETAIL ON THIS DRAWING FOR DETAILS.
3. 150ø KITCHEN / DRYER / W/R / FCU INTAKE / FCU EXHAUST DUCT. (TYPICAL UNLESS OTHERWISE NOTED)

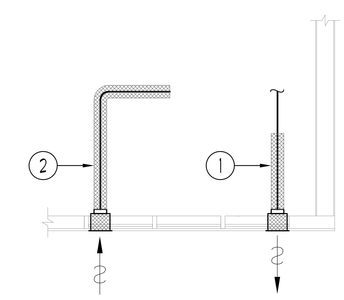

1. EXHAUST DUCTWORK TO BE C/W 1" THICK THERMAL INSULATION 6FT. FROM EXTERNAL WALL. (TYPICAL)
2. F/A INTAKE DUCTWORK TO BE C/W 1" THICK THERMAL INSULATION FOR ENTIRE LENGTH FROM EXTERIOR WALL TO ERV FCU. (TYPICAL)

TYPICAL DETAIL INSULATION FOR INTAKE/EXHAUST DUCTWORK — NTS

ACOUSTIC NOTES:

FOR FLOORS WITH ERV'S:

XX) ERV'S SHALL BE ISOLATED USING ISOLATORS INCORPORATING BOTH A SPRING ELEMENT AND A SECONDARY NEOPRENE-IN-SHEAR ELEMENT IN SERIES. DUCTWORK SHALL BE DE-COUPLED FROM FAN BY FLEXIBLE CONNECTORS. ASSOCIATED DUCTWORK SHALL BE SUSPENDED ON HANGERS WITH NEOPRENE PADS.

FOR TRANSITION FLOORS:

XX) ALL HORIZONTAL SUPPLY AIR DUCTWORK SHALL BE C/W 25MM INTERNAL ACOUSTIC LINING AND SHALL BE SUSPENDED ON RUBBER PADS IN THE HANGERS. ELBOWS SHALL BE COMPLETE WITH TURNING VANES.

XX) ALL SYSTEM/DOMESTIC PIPE LOOPS OR OFFSETS WHICH ARE LARGER THAN 75 MM SHALL BE ISOLATED USING NEOPRENE-IN-SHEAR HANGERS, AND ADDITIONAL 25 MM THICK RIBBED OR WAFFLED NEOPRENE PADS IN THE SADDLES OF CLEVIS HANGERS.

12) ALL PIPES 50MM DIA. AND SMALLER SHALL BE ISOLATED WITH NEOPRENE PADS.

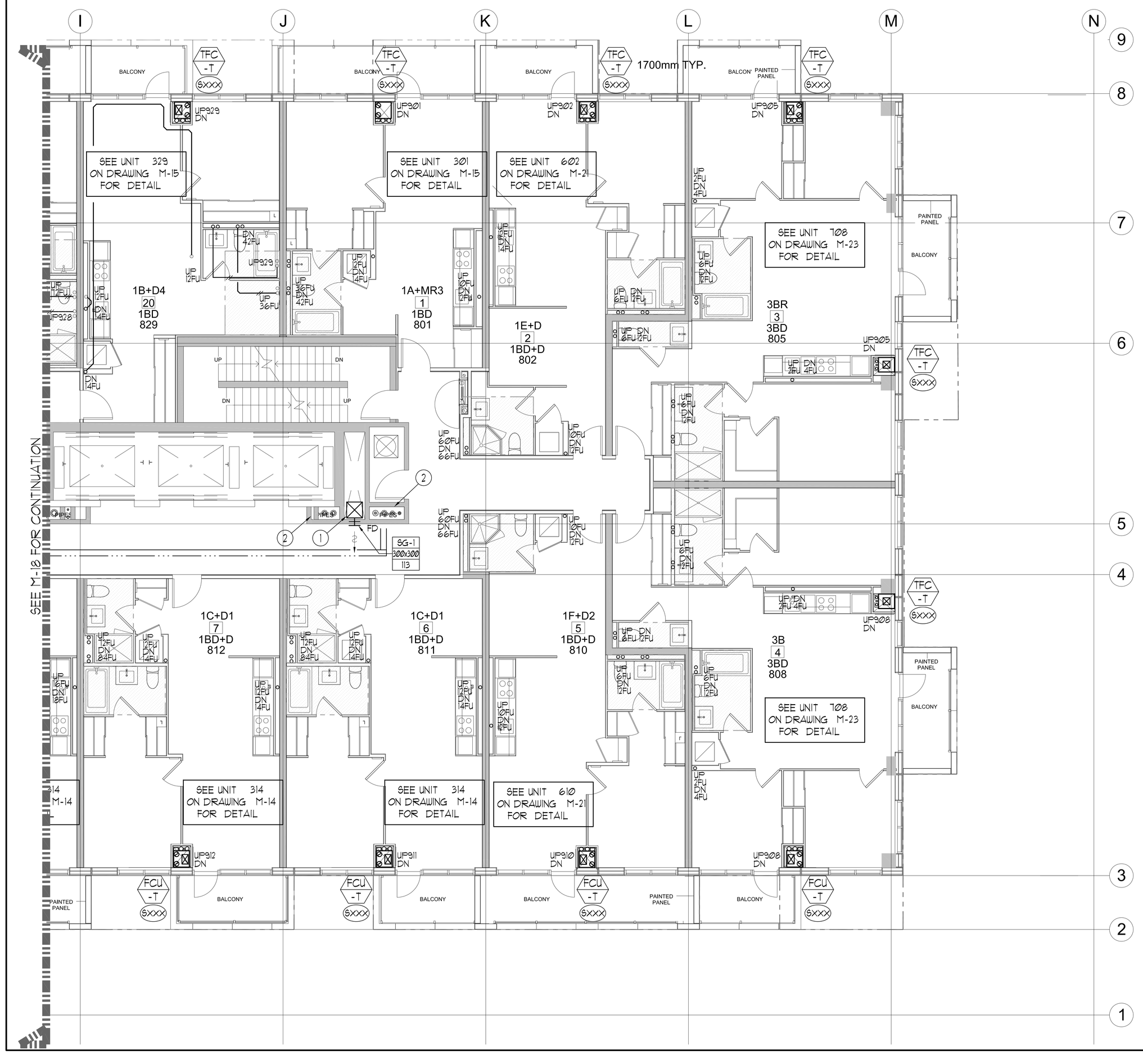

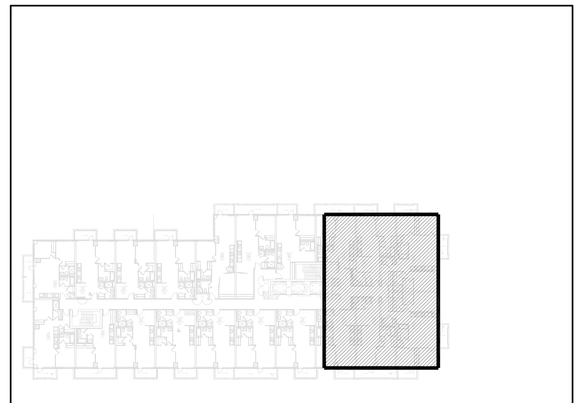

KEY PLAN — N.T.S.

LEGEND MECHANICAL

SYMBOL	DESCRIPTION
	SUPPLY AIR DIFFUSER
	SUPPLY AIR TROFFER
	LINEAR SUPPLY DIFFUSER
T	THERMOSTAT
S	FAN SWITCH
	RETURN AIR GRILLE
	EXHAUST AIR GRILLE
	SUPPLY DUCT UP
	SUPPLY DUCT DOWN
	RETURN DUCT UP
	RETURN DUCT DOWN
	EXHAUST DUCT UP
	EXHAUST DUCT DOWN
FD	FIRE DAMPER
BD	BALANCING DAMPER
MD	MOTORIZED DAMPER
MFD	MOTORIZED FIRE DAMPER
BDD	BACKDRAFT DAMPER
OBD	OPPOSED BLADE VOLUME CONTROL DAMPER C/W LOCKING QUADRANT
	TURNING VANES
	FLEXIBLE CONNECTION
	ACOUSTIC INSULATION
XX	TYPE OF EQUIPMENT / EQUIPMENT IDENTIFICATION
XXX / XXX	TYPE OF DIFFUSER OR GRILLE / GRILLE SIZE OR DIFFUSER NECK SIZE
XXX / XXX	AIRFLOW (CFM OR L/s)
	STARTER / 3 PHASE / PHASE /
S	IN-SUITE ERV MASTER SWITCH
S	FAN SWITCH / IN-SUITE ERV OVERRIDE BUTTON
CO	CO SENSOR
G	GAS LINE
G	GAS METER
	GAS COCK
	PRESSURE REDUCING VALVE
	SANITARY ABOVE GRADE
	SANITARY BELOW GRADE
	STORM ABOVE GRADE
	STORM BELOW GRADE
	DOMESTIC COLD WATER
	DOMESTIC HOT WATER
	DOMESTIC HOT WATER RECIRCULATION
	SANITARY VENT
	WATER METER
FD	FLOOR DRAIN
FFD	FUNNEL FLOOR DRAIN
HD	HUB DRAIN
RD	ROOF DRAIN
BLD	BLAB DRAIN
AD	AREA DRAIN
BLAD	BI-LEVEL AREA DRAIN
CB	CATCH BASIN
	SANITARY TRAP
	ELBOW UP
	ELBOW DOWN
CO	WALL CLEANOUT
CO	FLOOR CLEANOUT
HB	HOSE BIBB
NHB	NON-FREEZE HOSE BIBB
	GLOBE VALVE
	GATE VALVE
	BALL VALVE
	BUTTERFLY VALVE
	PRESSURE REDUCING VALVE
	CHECK VALVE
	CAP
	COMPRESSED AIR OUTLET
	BLACKFLOW PREVENTER
	CIRCUIT BALANCING VALVE
	MULTIPLE PIPES / - DENOTES NO. OF PIPES
T	TEMPERATURE SENSOR
T	THERMOMETER
	2-WAY MODULATING VALVE
	3-WAY MODULATING VALVE
	10"x4"(I) THERMOWELL C/W 1/2" BUSHING + 1/2" PLUG
XXX	FLOOR ELEVATION ABOVE LEVEL
XXX	FLOOR ELEVATION THIS LEVEL
XXX	HEADROOM (FLOOR TO U/S HEIGHT)

YR/MO/YY			BY
DATE	NO.	DESCRIPTION	BY

PLANK VOID ALL PRINTS DATED PREVIOUS TO FINAL DATE ABOVE

REVISIONS

CONTRACTOR MUST CHECK AND VERIFY ALL DIMENSIONS AND CONDITIONS ON THE JOB AND REPORT DISCREPANCIES TO THE ENGINEERS BEFORE PROCEEDING WITH THE WORK. THIS DRAWING IS THE PROPERTY OF THE ENGINEERS AND MUST BE RETURNED UPON COMPLETION OF THE WORK.

DRAWINGS ARE NOT TO BE SCALED

NOVA TREND ENGINEERING SERVICES LTD.
179 West Beaver Creek Road, Unit 31
Richmond Hill, Ontario L4B 3M1
Tel: 905 882-5445
Fax: 905 882-5447
Email: cad@novatrendeng.com

DRAWING TITLE
B/F NORTH
MECHANICAL LAYOUT

PROJECT TITLE
ALEXANDRA PARK

XXX
TORONTO ONTARIO

DRAWN BY:	CHECKED BY:	SCALE:
G.S.	E.P.	1:50
DATE: FEB. 13	PROJECT NUMBER: 1313	DRAWING NUMBER: M-25 OF 35

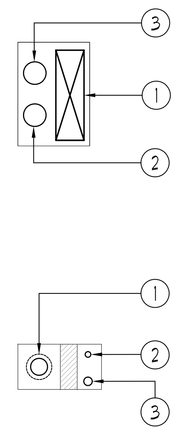

1. SOUTH F/A SHAFT B
2. 200ø CWS
3. 200ø CWR

1. 150ø SWS
2. 50ø GAS VENT
3. 75ø GAS (5LB.) FOR BUILDING

SOUTH PIPE SHAFT, 9/F -13/F — NTS

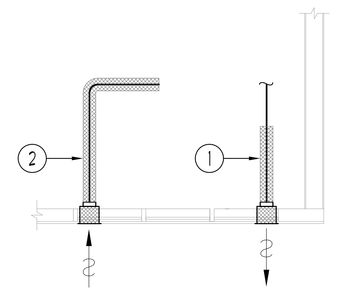

1. EXHAUST DUCTWORK TO BE C/W 1" THICK THERMAL INSULATION 6FT. FROM EXTERNAL WALL. (TYPICAL)
2. F/A INTAKE DUCTWORK TO BE C/W 1" THICK THERMAL INSULATION FOR ENTIRE LENGTH FROM EXTERIOR WALL TO ERV FCU. (TYPICAL)

TYPICAL DETAIL: INSULATION FOR INTAKE & EXHAUST DUCTWORK — NTS

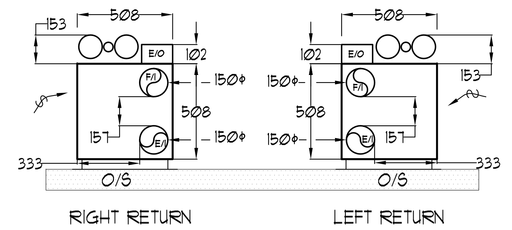

NOTE:
- ALL DIMENSIONS IN MM.
- HEIGHT OF FCU IS 2,023.

INSUITE FCU DIMENSIONS — NTS

UNIT	NAME	AREA (SQ. FT.)	# OF WR	# OF POWDER	SIZE (T)	FIXTURE UNITS	BR	SQ. FT/T

GRILLE SIZING TABLE

DESIGNATION	SIZE	L/S (UNLESS SPECIFIED ELSEWHERE)
SG-A	300x100	47-70
SG-B	300x150	71-93
SG-C	400x150	94-140
SG-D	450x150	141-188
EG-A	150x150	35
W-1	225x200	210mm(L)
W-2	425x200	INSULATED
W-3	625x200	WALL BOX

VERTICAL FAN COIL SIZE

DESIGNATION	MODEL	W x D
FCU-1T	450	500x660
FCU-1.5T	600	500x660
FCU-2T	800	500x660
FCU-2.5T	1000	550x660
FCU-3T	1200	550x660

NOTE:
A MIN. OF 125mm IS REQUIRED ON THE SIDE OF PIPE RISER.

DUCT SIZING TABLE
(4.06 m/s, 800 FPM)

DESIGNATION	L/s	DUCT SIZE	DESIGNATION	L/s	DUCT SIZE
A	47	100x150	G	189	350x150
B	71	150x150	H	236	450x150
C	94	200x150	J	283	500x150
D	118	200x150	K	330	600x150
E	141	250x150	L	377	500x200
F	165	300x150			

GENERAL NOTES:

1) CONTRACTOR SHALL CO-ORDINATE ARCHITECTURAL, STRUCTURAL, LIGHTING, HVAC, SPRINKLER DRAWINGS TO AVOID AREAS OF CONFLICT AND TO MAINTAIN CEILING HEIGHTS.

2) CONTRACTOR SHALL REPORT ALL DISCREPANCIES AND AREA OF CONFLICTS TO THE ENGINEER PRIOR TO WORK BEGINS.

3) PROVIDE EXPANSION CHAMBERS FOR ALL KITCHEN SINKS.

4) SEE INSTALLATION DETAILS DRAWING FOR WASHER DOM. H+C WATER, SANITARY CONNECTION DETAILS.

5) SUPPLY AND INSTALL COMPLETE DOMESTIC HOT AND COLD WATER LINES, SANITARY AND VENT LINES TO EACH FIXTURE /EQUIPMENT INCLUDING WATER CLOSETS, LAVATORIES, BATHS, SHOWERS, KITCHEN SINK, WASHING MACHINES, DISHWASHERS, AND FLOOR DRAINS. KITCHEN SINK, LAVATORIES, WATER CLOSETS AND WASHING MACHINE TO BE C/W LOCALIZED SHUT-OFF VALVES.

6) ALL VENT PIPE INSTALLATION TO COMPLY WITH PLUMBING CODES.

7) FOR D.H.C. W. RISER SIZES, REFER TO RISER DIAGRAM

8) FIRE DAMPERS ARE REQUIRED TO BE LISTED AND ARE TO HAVE FIRE PROTECTION RATING OF THE PENETRATED FIRE SEPARATION.

9) THE PIPING PENETRATING THE VARIOUS FIRE SEPARATION IS REQUIRED TO BE FIRESTOPPED WITH A LISTED FIRESTOPPING MATERIAL IN ACCORDANCE WITH OBC ARTICLE 3.1.9.1

10) THE FIRE HOSE CABINET THAT ARE RECESSED INTO THE EXIT STAIR SHAFTS ARE REQUIRED TO BE SEPARATED FROM THE EXIT STAIR BY A 2 HR. FIRE SEPARATION.

11) NO FLEXIBLE DUCT SHALL BE USED FOR ANY IN-SUITE DUCTWORK.

12) PROVIDE 25MM EXTERNAL INSULATION TO ENTIRE FRESH AIR DUCT FROM EXTERIOR WALL TO ERV FAN COIL UNIT.

13) DRYER EXHAUST DUCT SHALL BE SMOOTH AND CORROSION-RESISTANT MATERIAL (FLEXIBLE CONNECTION IS NOT ACCEPTABLE).

REFER TO DWG. M-X FOR ACOUSTIC NOTES

⚠ 2850mm CLEAR FLOOR TO UNDERSLAB

NOTES:

1. SOUTH F/A SHAFT B FROM G/F TO 14/F DUCT SERVING CORRIDOR FROM 9/F TO 14/F. SEE VENTILATION RISER DIAGRAM FOR DETAILS.
2. PIPE SHAFT - REFER TO PIPE DIAGRAM FOR DETAILS.
3. 150ø KITCHEN / DRYER / W/R / FCU INTAKE / FCU EXHAUST DUCT. (TYPICAL UNLESS OTHERWISE NOTED)

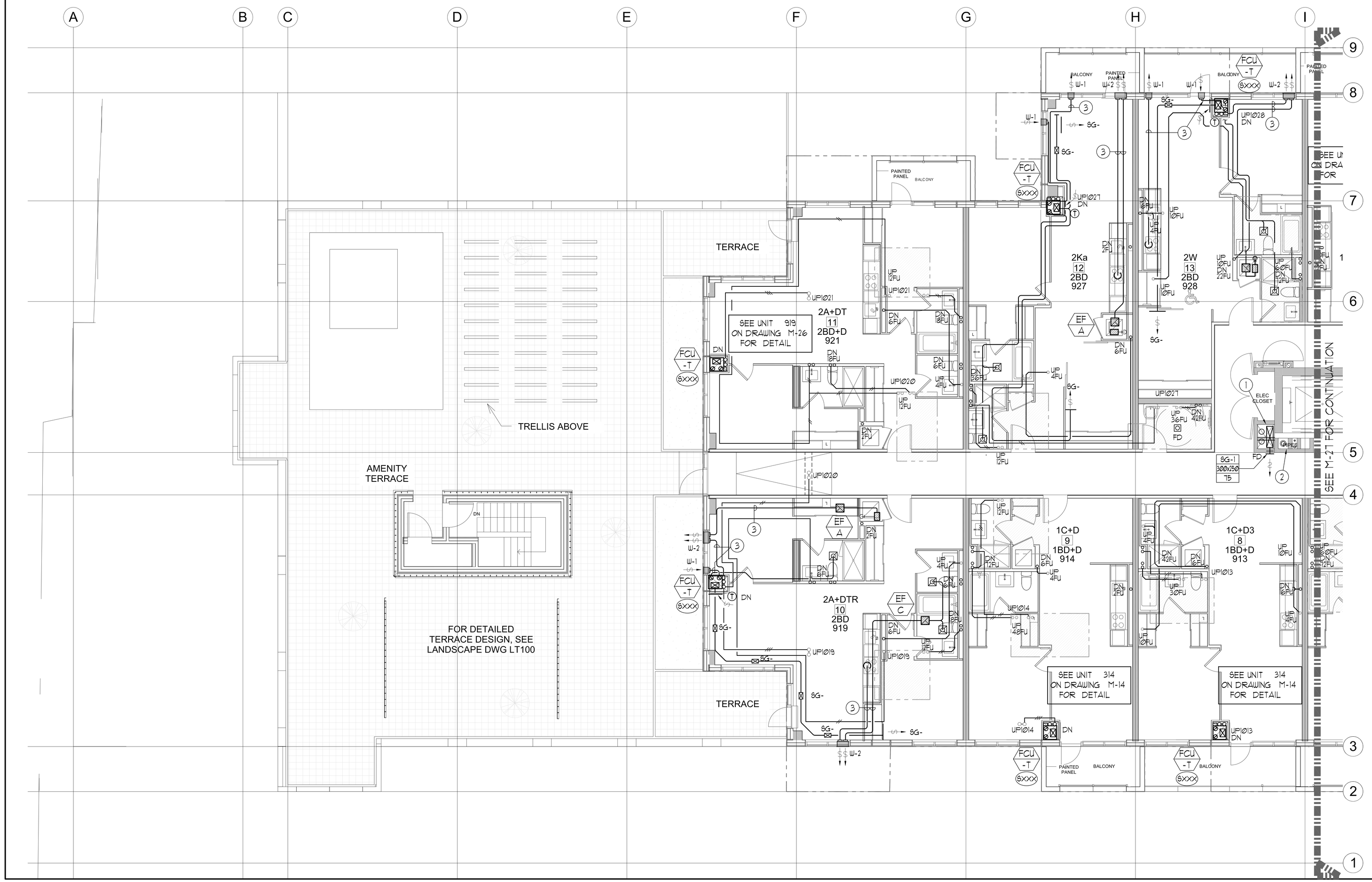

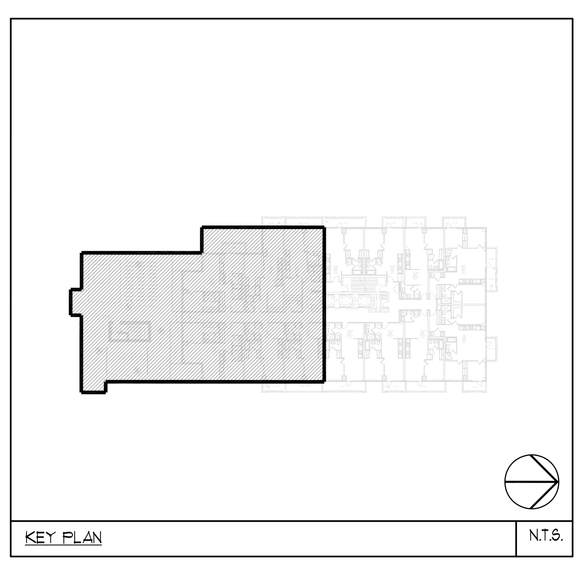

KEY PLAN — N.T.S.

LEGEND MECHANICAL

SYMBOL	DESCRIPTION
	SUPPLY AIR DIFFUSER
	SUPPLY AIR TROFFER
	LINEAR SUPPLY DIFFUSER
T	THERMOSTAT
S	FAN SWITCH
	RETURN AIR GRILLE
	EXHAUST AIR GRILLE
	SUPPLY DUCT UP
	SUPPLY DUCT DOWN
	RETURN DUCT UP
	RETURN DUCT DOWN
	EXHAUST DUCT UP
	EXHAUST DUCT DOWN
FD	FIRE DAMPER
BD	BALANCING DAMPER
MD	MOTORIZED DAMPER
MFD	MOTORIZED FIRE DAMPER
BDD	BACKDRAFT DAMPER
OBD	OPPOSED BLADE VOLUME CONTROL DAMPER C/W LOCKING QUADRANT
	TURNING VANES
	FLEXIBLE CONNECTION
	ACOUSTIC INSULATION
XX	-TYPE OF EQUIPMENT -EQUIPMENT IDENTIFICATION
XXX	-TYPE OF DIFFUSER OR GRILLE -GRILLE SIZE OR DIFFUSER NECK SIZE -AIRFLOW (CFM OR L/s)
XX, Y	STARTER / 3 PHASE / PHASE /
S	IN-SUITE ERV MASTER SWITCH
S	FAN SWITCH / IN-SUITE ERV OVERRIDE BUTTON
CO	CO SENSOR
G	GAS LINE
G	GAS METER
	GAS COCK
PR	PRESSURE REDUCING VALVE
	SANITARY ABOVE GRADE
	SANITARY BELOW GRADE
	STORM ABOVE GRADE
	STORM BELOW GRADE
	DOMESTIC COLD WATER
	DOMESTIC HOT WATER
	DOMESTIC HOT WATER RECIRCULATION
	SANITARY VENT
	WATER METER
FD	FLOOR DRAIN
FFD	FUNNEL FLOOR DRAIN
HD	HUB DRAIN
RD	ROOF DRAIN
SLD	SLAB DRAIN
AD	AREA DRAIN
BLAD	BI-LEVEL AREA DRAIN
CB	CATCH BASIN
	SANITARY TRAP
	ELBOW UP
	ELBOW DOWN
CO	WALL CLEANOUT
CO	FLOOR CLEANOUT
HB	HOSE BIBB
NFHB	NON-FREEZE HOSE BIBB
	GLOBE VALVE
	GATE VALVE
	BALL VALVE
	BUTTERFLY VALVE
	PRESSURE REDUCING VALVE
	CHECK VALVE
	CAP
	COMPRESSED AIR OUTLET
N	BACKFLOW PREVENTER
	CIRCUIT BALANCING VALVE
	MULTIPLE PIPES / - DENOTES NO. OF PIPES
T	TEMPERATURE SENSOR
T	THERMOMETER
	2-WAY MODULATING VALVE
	3-WAY MODULATING VALVE
	1/2"x4'O / THERMOWELL C/W 1/2" BUSHING x 1/2" PLUG
XXX	-FLOOR ELEVATION ABOVE LEVEL
XXX	-FLOOR ELEVATION THIS LEVEL
XXX	-HEADROOM (FLOOR TO U/S HEIGHT)

REV/DD/YY		ISSUED FOR ---	E.P.
DATE	NO.	DESCRIPTION	BY

MARK VOID ALL PRINTS DATED PREVIOUS TO FINAL DATE ABOVE

REVISIONS

CONTRACTOR MUST CHECK AND VERIFY ALL DIMENSIONS AND CONDITIONS ON THE JOB AND REPORT DISCREPANCIES TO THE ENGINEERS BEFORE PROCEEDING WITH THE WORK. THIS DRAWING IS THE PROPERTY OF THE ENGINEERS AND MUST BE RETURNED UPON COMPLETION OF THE WORK.

DRAWINGS ARE NOT TO BE SCALED

NOVA TREND ENGINEERING GROUP LTD.
119 West Beaver Creek Road, Unit 31
Richmond Hill, Ontario L4B 3M1
Tel: 905 882-5445
Fax: 905 882-5447
Email: cad@novatrendeng.com

DRAWING TITLE: 9/F SOUTH MECHANICAL LAYOUT

PROJECT TITLE: ALEXANDRA PARK
XXX
TORONTO ONTARIO

DRAWN BY:	CHECKED BY:	SCALE:
G.S.	E.P.	1:50
DATE: FEB. 13	PROJECT NUMBER: 1313	DRAWING NUMBER: M-26 OF 35

Drawing name: \\CADSERVER\Current Dwg\1313\1313 - Alexandra Park\2W\1313M- 26,27 (9F PLAN -SOUTH & NORTH MECHANICAL LAYOUT).dwg Plotted: Mar 12, 2014 - 3:43pm

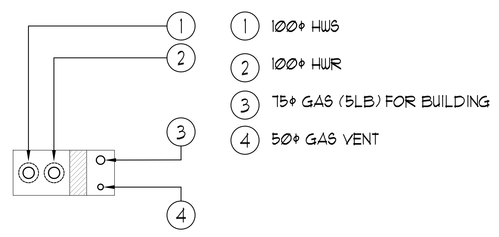

NORTH PIPE SHAFT A: G/F -13/F — NTS

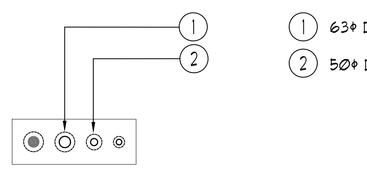

NORTH PIPE SHAFT B: G/F -13/F — NTS

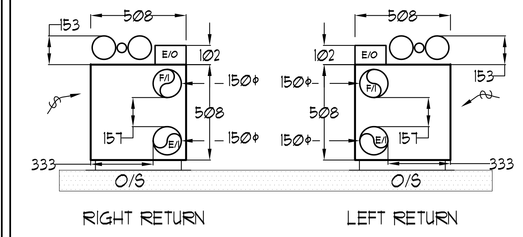

NOTE:
- ALL DIMENSIONS IN MM.
- HEIGHT OF FCU IS 2023.

INSUITE FCU DIMENSIONS — NTS

UNIT	NAME	AREA (SQ. FT.)	# OF WR	# OF POWDER	SIZE (T)	FIXTURE UNITS	BR	SQ. FT/T

GRILLE SIZING TABLE

DESIGNATION	SIZE	L/S (UNLESS SPECIFIED OTHERWISE)
SG-A	300x100	47-70
SG-B	300x150	71-93
SG-C	400x150	94-140
SG-D	450x150	141-188
EG-A	150x150	35
W-1	225x200	210mm(L)
W-2	425x200	INSULATED
W-3	625x200	WALL BOX

VERTICAL FAN COIL SIZE

DESIGNATION	MODEL	W x D
FCU-1T	450	500x660
FCU-1.5T	600	500x660
FCU-2T	800	500x660
FCU-2.5T	1000	559x660
FCU-3T	1200	559x660

NOTE:
A MIN. OF 125mm IS REQUIRED ON THE SIDE OF PIPE RISER.

DUCT SIZING TABLE
(4.06 m/s, 800 FPM)

DESIGNATION	L/s	DUCT SIZE	DESIGNATION	L/s	DUCT SIZE
A	47	100x150	G	189	350x150
B	71	150x150	H	236	450x150
C	94	200x150	J	283	500x150
D	118	200x150	K	330	600x150
E	141	250x150	L	377	500x200
F	165	300x150			

GENERAL NOTES:

1) CONTRACTOR SHALL CO-ORDINATE ARCHITECTURAL, STRUCTURAL, LIGHTING, HVAC, SPRINKLER DRAWINGS TO AVOID AREAS OF CONFLICT AND TO MAINTAIN CEILING HEIGHTS.

2) CONTRACTOR SHALL REPORT ALL DISCREPANCIES AND AREA OF CONFLICTS TO THE ENGINEER PRIOR TO WORK BEGINS.

3) PROVIDE EXPANSION CHAMBERS FOR ALL KITCHEN SINKS.

4) SEE INSTALLATION DETAILS DRAWING FOR WASHER DOM. H+C WATER, SANITARY CONNECTION DETAILS.

5) SUPPLY AND INSTALL COMPLETE DOMESTIC HOT AND COLD WATER LINES, SANITARY AND VENT LINES TO EACH FIXTURE /EQUIPMENT INCLUDING WATER CLOSETS, LAVATORIES, BATHS, SHOWERS, KITCHEN SINK, WASHING MACHINES, DISHWASHERS, AND FLOOR DRAINS. KITCHEN SINK, LAVATORIES, WATER CLOSETS AND WASHING MACHINE TO BE C/W LOCALIZED SHUT-OFF VALVES.

6) ALL VENT PIPE INSTALLATION TO COMPLY WITH PLUMBING CODES.

7) FOR D.H.C. W. RISER SIZES, REFER TO RISER DIAGRAM

8) FIRE DAMPERS ARE REQUIRED TO BE LISTED AND ARE TO HAVE FIRE PROTECTION RATING OF THE PENETRATED FIRE SEPARATION.

9) THE PIPING PENETRATING THE VARIOUS FIRE SEPARATION IS REQUIRED TO BE FIRESTOPPED WITH A LISTED FIRESTOPPING MATERIAL IN ACCORDANCE WITH OBC ARTICLE 3.1.9.1

10) THE FIRE HOSE CABINET THAT ARE RECESSED INTO THE EXIT STAIR SHAFTS ARE REQUIRED TO BE SEPARATED FROM THE EXIT STAIR BY A 2 HR. FIRE SEPARATION.

11) NO FLEXIBLE DUCT SHALL BE USED FOR ANY IN-SUITE DUCTWORK.

12) PROVIDE 25MM EXTERNAL INSULATION TO ENTIRE FRESH AIR DUCT FROM EXTERIOR WALL TO ERV FAN COIL UNIT.

13) DRYER EXHAUST DUCT SHALL BE SMOOTH AND CORROSION-RESISTANT MATERIAL (FLEXIBLE CONNECTION IS NOT ACCEPTABLE).

REFER TO DWG. M-X FOR ACOUSTIC NOTES

2850mm CLEAR FLOOR TO UNDERSLAB

NOTES:

1. NORTH F/A SERVING FROM G/F TO 14/F. F/A DUCT SERVING CORRIDOR FROM G/F TO 14/F. SEE VENTILATION RISER DIAGRAM FOR DETAILS.
2. PIPE SHAFT - REFER TO PIPE DIAGRAM FOR DETAILS.
3. 150ø KITCHEN / DRYER / W/R / FCU INTAKE / FCU EXHAUST DUCT. (TYPICAL UNLESS OTHERWISE NOTED)

LEGEND
MECHANICAL

SYMBOL	DESCRIPTION
	SUPPLY AIR DIFFUSER
	SUPPLY AIR TROFFER
	LINEAR SUPPLY DIFFUSER
T	THERMOSTAT
S	FAN SWITCH
	RETURN AIR GRILLE
	EXHAUST AIR GRILLE
	SUPPLY DUCT UP
	SUPPLY DUCT DOWN
	RETURN DUCT UP
	RETURN DUCT DOWN
	EXHAUST DUCT UP
	EXHAUST DUCT DOWN
FD	FIRE DAMPER
BD	BALANCING DAMPER
MD	MOTORIZED DAMPER
MFD	MOTORIZED FIRE DAMPER
BDD	BACKDRAFT DAMPER
OBD	OPPOSED BLADE VOLUME CONTROL DAMPER C/W LOCKING QUADRANT
	TURNING VANES
	FLEXIBLE CONNECTION
	ACOUSTIC INSULATION
A/V	TYPE OF EQUIPMENT / EQUIPMENT IDENTIFICATION
XX/XX	TYPE OF DIFFUSER OR GRILLE / GRILLE SIZE OR DIFFUSER NECK SIZE
XXX/XXX	AIRFLOW (CFM OR L/s)
3Ø, V	STARTER (3 PHASE , 1 PHASE)
S	IN-SUITE ERV MASTER SWITCH
F	FAN SWITCH / IN-SUITE ERV OVERRIDE BUTTON
CO	CO SENSOR
G	GAS LINE
G	GAS METER
G	GAS COCK
PR	PRESSURE REDUCING VALVE
	SANITARY ABOVE GRADE
	SANITARY BELOW GRADE
	STORM ABOVE GRADE
	STORM BELOW GRADE
	DOMESTIC COLD WATER
	DOMESTIC HOT WATER
	DOMESTIC HOT WATER RECIRCULATION
	SANITARY VENT
	WATER METER
FD	FLOOR DRAIN
FFD	FUNNEL FLOOR DRAIN
HD	HUB DRAIN
RD	ROOF DRAIN
BLD	BLAB DRAIN
AD	AREA DRAIN
BLAD	BI-LEVEL AREA DRAIN
CB	CATCH BASIN
	SANITARY TRAP
	ELBOW UP
	ELBOW DOWN
CO	WALL CLEANOUT
CO	FLOOR CLEANOUT
HB	HOSE BIBB
NFHB	NON-FREEZE HOSE BIBB
	GLOBE VALVE
	GATE VALVE
	BALL VALVE
	BUTTERFLY VALVE
	PRESSURE REDUCING VALVE
	CHECK VALVE
	CAP
	COMPRESSED AIR OUTLET
N	BACKFLOW PREVENTER
	CIRCUIT BALANCING VALVE
	MULTIPLE PIPES / - DENOTES NO. OF PIPES
T	TEMPERATURE SENSOR
T	THERMOMETER
	2-WAY MODULATING VALVE
	3-WAY MODULATING VALVE
T	1/2"x4 1/2" THERMOWELL C/W 1/2" BUSHING x 1/2" PLUG
XXXX	FLOOR ELEVATION ABOVE LEVEL
XXXX	FLOOR ELEVATION THIS LEVEL
XXXX	HEADROOM (FLOOR TO U/S HEIGHT)

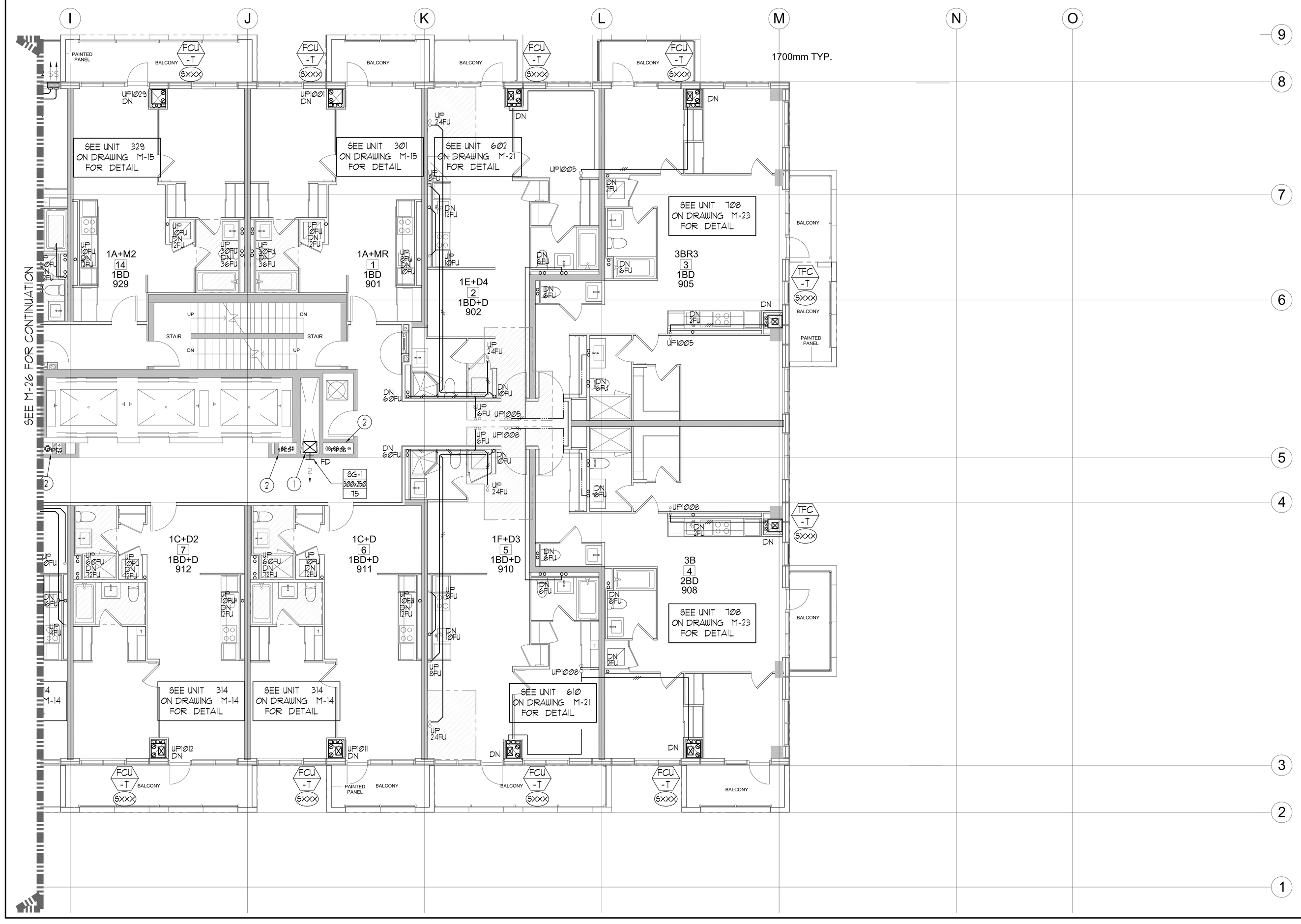

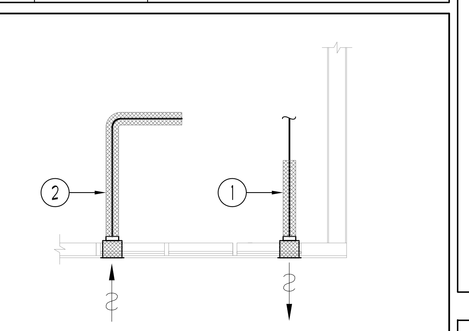

1. EXHAUST DUCTWORK TO BE C/W 1" THICK THERMAL INSULATION 6FT. FROM EXTERNAL WALL. (TYPICAL)
2. F/A INTAKE DUCTWORK TO BE C/W 1" THICK THERMAL INSULATION FOR ENTIRE LENGTH FROM EXTERIOR WALL TO ERV FCU. (TYPICAL)

TYPICAL DETAIL:INSULATION FOR INTAKE/EXHAUT DUCTWORK — NTS

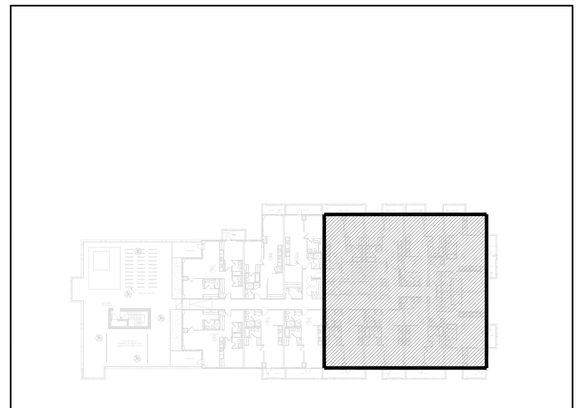

KEY PLAN — N.T.S.

REV/DC/YT	1	ISSUED FOR ---	E.P.
DATE	NO.	DESCRIPTION	BY

THANK YOU! ALL PRINTS DATED PREVIOUS TO FINAL DATE ABOVE

REVISIONS

CONTRACTOR MUST CHECK AND VERIFY ALL DIMENSIONS AND CONDITIONS ON THE JOB BEFORE PROCEEDING WITH THE WORK. ALL DRAWINGS WHILE PROCEEDING WITH THE WORK. THIS DRAWING IS THE PROPERTY OF THE ENGINEERS AND MUST BE RETURNED UPON COMPLETION OF THE WORK.

DRAWINGS ARE NOT TO BE SCALED

NOVA TREND DEVELOPMENTS

139 West Beaver Creek Road, Unit 31
Richmond Hill, Ontario L4B 3M1
Tel: 905 882-9449
Fax: 905 882-9447
Email: cad@novatrendeng.com

DRAWING TITLE:
9/F NORTH
MECHANICAL LAYOUT

PROJECT TITLE:
ALEXANDRA PARK

XXX
TORONTO ONTARIO

DRAWN BY:	CHECKED BY:	SCALE:
G.S.	E.P.	1:50
DATE: FEB. 13	PROJECT NUMBER: 1313	DRAWING NUMBER: M-27 OF 39

Drawing name: \\CADSERVER\Current Dwg's\1313\1313M - 26,27 OF PLAN - 9/20/14 & NORTH MECHANICAL LAYOUT.dwg Printed: Mar 12, 2014 - 3:43pm

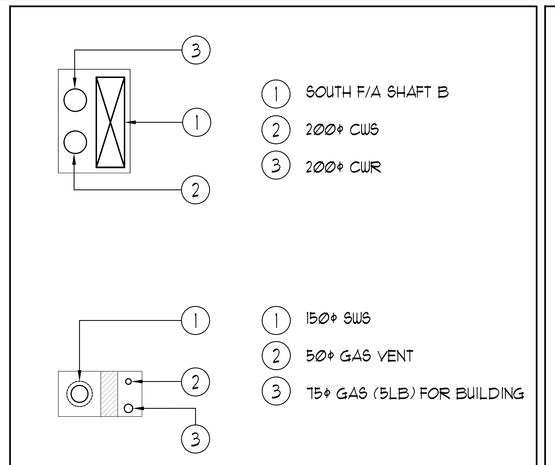

SOUTH PIPE SHAFT: 9/F -13/F — NTS

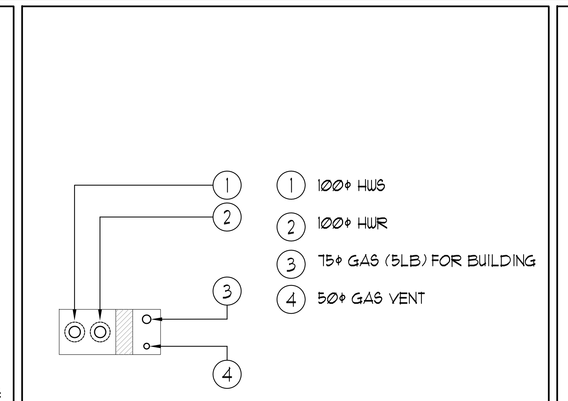

NORTH PIPE SHAFT A: 9/F -13/F — NTS

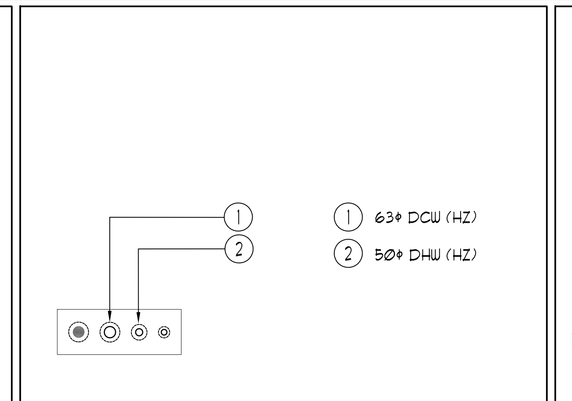

NORTH PIPE SHAFT B: 9/F -13/F — NTS

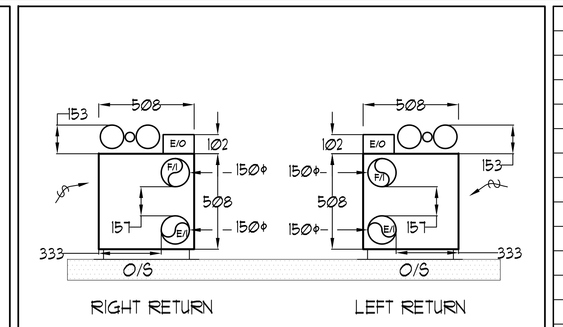

INSUITE FCU DIMENSIONS — NTS

UNIT	NAME	AREA (SQ. FT.)	# OF WR	# OF POWDER	SIZE (T)	FIXTURE UNITS	BR	SQ. FT/T

ACOUSTIC NOTES:

FOR FLOORS WITH ERV'S:

XX) ERV'S SHALL BE ISOLATED USING ISOLATORS INCORPORATING BOTH A SPRING ELEMENT AND A SECONDARY NEOPRENE-IN-SHEAR ELEMENT IN SERIES. DUCTWORK SHALL BE DE-COUPLED FROM FAN BY FLEXIBLE CONNECTORS. ASSOCIATED DUCTWORK SHALL BE SUSPENDED ON HANGERS WITH NEOPRENE PADS.

FOR TRANSITION FLOORS:

XX) ALL HORIZONTAL SUPPLY AIR DUCTWORK SHALL BE C/W 25MM INTERNAL ACOUSTIC LINING AND SHALL BE SUSPENDED ON RUBBER PADS IN THE HANGERS. ELBOWS SHALL BE COMPLETE WITH TURNING VANES.

XX) ALL SYSTEM/DOMESTIC PIPE LOOPS OR OFFSETS WHICH ARE LARGER THAN 75 MM SHALL BE ISOLATED USING NEOPRENE-IN-SHEAR HANGERS, AND ADDITIONAL 25 MM THICK RIBBED OR WAFFLED NEOPRENE PADS IN THE SADDLES OF CLEVIS HANGERS.

12) ALL PIPES 50MM DIA. AND SMALLER SHALL BE ISOLATED WITH NEOPRENE PADS.

LEGEND
MECHANICAL

SYMBOL	DESCRIPTION
	SUPPLY AIR DIFFUSER
	SUPPLY AIR TROFFER
	LINEAR SUPPLY DIFFUSER
T	THERMOSTAT
S	FAN SWITCH
	RETURN AIR GRILLE
	EXHAUST AIR GRILLE
	SUPPLY DUCT UP
	SUPPLY DUCT DOWN
	RETURN DUCT UP
	RETURN DUCT DOWN
	EXHAUST DUCT UP
	EXHAUST DUCT DOWN
FD	FIRE DAMPER
BD	BALANCING DAMPER
MD	MOTORIZED DAMPER
MFD	MOTORIZED FIRE DAMPER
BDD	BACKDRAFT DAMPER
OBD	OPPOSED BLADE VOLUME CONTROL DAMPER C/W LOCKING QUADRANT
	TURNING VANES
	FLEXIBLE CONNECTION
	ACOUSTIC INSULATION
XX / XXXX	TYPE OF EQUIPMENT / EQUIPMENT IDENTIFICATION
XXX-X / XXXX	TYPE OF DIFFUSER OR GRILLE / GRILLE SIZE OR DIFFUSER NECK SIZE
XXX / XXXX	AIRFLOW (CFM OR L/S)
XX, XX / X	STARTER (3 PHASE , 1 PHASE) / IN-SUITE ERV MASTER SWITCH
S	FAN SWITCH / IN-SUITE ERV OVERRIDE BUTTON
CO	CO SENSOR
G	GAS LINE
G	GAS METER
G	GAS COCK
RV	PRESSURE REDUCING VALVE
	SANITARY ABOVE GRADE
	SANITARY BELOW GRADE
	STORM ABOVE GRADE
	STORM BELOW GRADE
	DOMESTIC COLD WATER
	DOMESTIC HOT WATER
	DOMESTIC HOT WATER RECIRCULATION
	SANITARY VENT
WM	WATER METER
FD	FLOOR DRAIN
FFD	FUNNEL FLOOR DRAIN
HD	HUB DRAIN
RD	ROOF DRAIN
BLD	BLAB DRAIN
AD	AREA DRAIN
BLAD	BI-LEVEL AREA DRAIN
CB	CATCH BASIN
	SANITARY TRAP
	ELBOW UP
	ELBOW DOWN
CO	WALL CLEANOUT
CO	FLOOR CLEANOUT
HB	HOSE BIBB
NFHB	NON-FREEZE HOSE BIBB
	GLOBE VALVE
	GATE VALVE
	BALL VALVE
	BUTTERFLY VALVE
	PRESSURE REDUCING VALVE
	CHECK VALVE
	CAP
CA	COMPRESSED AIR OUTLET
NV	BACKFLOW PREVENTER
	CIRCUIT BALANCING VALVE
	MULTIPLE PIPES / - DENOTES NO. OF PIPES
T	TEMPERATURE SENSOR
T	THERMOMETER
2W	2-WAY MODULATING VALVE
3W	3-WAY MODULATING VALVE
TW	10"x4"(D) THERMOWELL C/W 1/2" BUSHING X 1/2" PLUG
XXXX	FLOOR ELEVATION ABOVE LEVEL
XXXX	FLOOR ELEVATION THIS LEVEL
XXXX	HEADROOM (FLOOR TO U/S HEIGHT)

GENERAL NOTES:

1) CONTRACTOR SHALL CO-ORDINATE ARCHITECTURAL, STRUCTURAL, LIGHTING, HVAC, SPRINKLER DRAWINGS TO AVOID AREAS OF CONFLICT AND TO MAINTAIN CEILING HEIGHTS.

2) CONTRACTOR SHALL REPORT ALL DISCREPANCIES AND AREA OF CONFLICTS TO THE ENGINEER PRIOR TO WORK BEGINS.

3) PROVIDE EXPANSION CHAMBERS FOR ALL KITCHEN SINKS.

4) SEE INSTALLATION DETAILS DRAWING FOR WASHER DOM. H+C WATER, SANITARY CONNECTION DETAILS.

5) SUPPLY AND INSTALL COMPLETE DOMESTIC HOT AND COLD WATER LINES, SANITARY AND VENT LINES TO EACH FIXTURE /EQUIPMENT INCLUDING WATER CLOSETS, LAVATORIES, BATHS, SHOWERS, KITCHEN SINK, WASHING MACHINES, DISHWASHERS, AND FLOOR DRAINS. KITCHEN SINK, LAVATORIES, WATER CLOSETS AND WASHING MACHINE TO BE C/W LOCALIZED SHUT-OFF VALVES.

6) ALL VENT PIPE INSTALLATION TO COMPLY WITH PLUMBING CODES.

7) FOR D.H.+C. W. RISER SIZES, REFER TO RISER DIAGRAM

8) FIRE DAMPERS ARE REQUIRED TO BE LISTED AND ARE TO HAVE FIRE PROTECTION RATING OF THE PENETRATED FIRE SEPARATION.

9) THE PIPING PENETRATING THE VARIOUS FIRE SEPARATION IS REQUIRED TO BE FIRESTOPPED WITH A LISTED FIRESTOPPING MATERIAL IN ACCORDANCE WITH OBC ARTICLE 3.1.9.1

10) THE FIRE HOSE CABINET THAT ARE RECESSED INTO THE EXIT STAIR SHAFTS ARE REQUIRED TO BE SEPARATED FROM THE EXIT STAIR BY A 2 HR. FIRE SEPARATION.

11) NO FLEXIBLE DUCT SHALL BE USED FOR ANY IN-SUITE DUCTWORK.

12) PROVIDE 25MM EXTERNAL INSULATION TO ENTIRE FRESH AIR DUCT FROM EXTERIOR WALL TO ERV FAN COIL UNIT.

13) DRYER EXHAUST DUCT SHALL BE SMOOTH AND CORROSION-RESISTANT MATERIAL (FLEXIBLE CONNECTION IS NOT ACCEPTABLE).

REFER TO DWG. M-X FOR ACOUSTIC NOTES

△ 2750mm CLEAR FLOOR TO UNDERSLAB

NOTES:

1. SOUTH F/A SHAFT B FROM G/F TO 14/F DUCT SERVING CORRIDOR FROM 9/F TO 14/F. SEE VENTILATION RISER DIAGRAM FOR DETAILS.
2. NORTH F/A SERVING FROM G/F TO 14/F. F/A DUCT SERVING CORRIDOR FROM G/F TO 14/F. SEE VENTILATION RISER DIAGRAM FOR DETAILS.
3. PIPE SHAFT - REFER TO PIPE DIAGRAM FOR DETAILS.
4. 150ø KITCHEN / DRYER / W/R / FCU INTAKE / FCU EXHAUST DUCT. (TYPICAL UNLESS OTHERWISE NOTED)

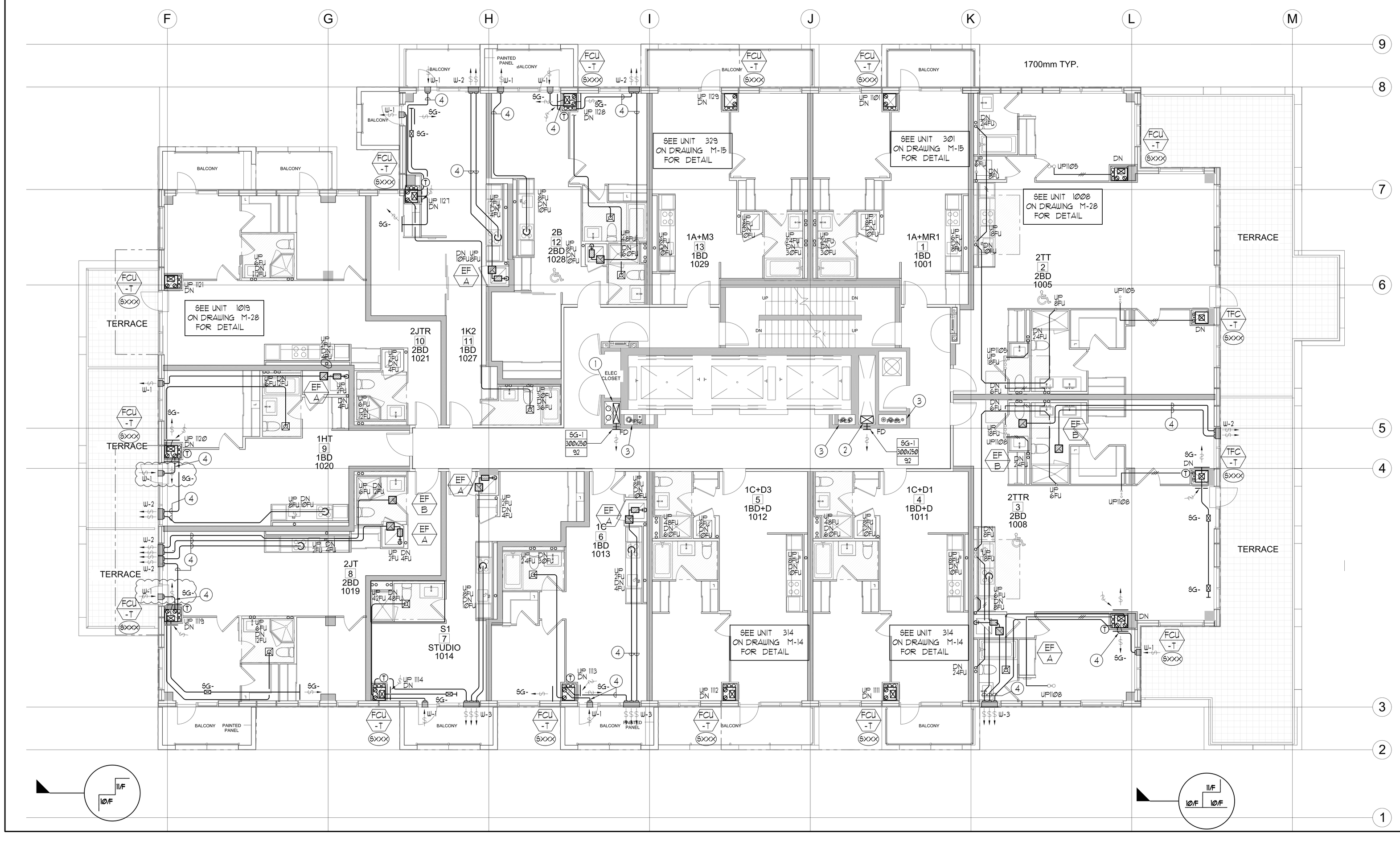

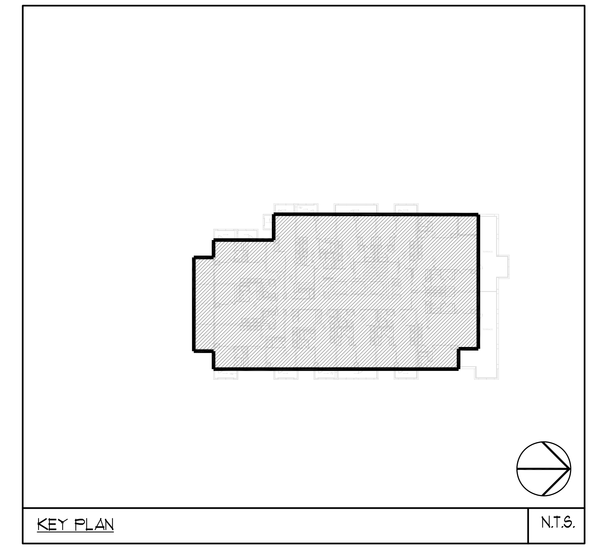

KEY PLAN — N.T.S.

PROJ/ITT	1	ISSUED FOR ---	E.P.
DATE	NO.	DESCRIPTION	BY

MARK VOID ALL PRINTS DATED PREVIOUS TO FINAL DATE ABOVE

REVISIONS

CONTRACTOR MUST CHECK AND VERIFY ALL DIMENSIONS AND CONDITIONS ON THE JOB AND REPORT DISCREPANCIES TO THE ENGINEERS BEFORE PROCEEDING WITH THE WORK OR THE FABRICATION OF THE PARTS AFFECTED AND THEY MUST BE RETURNED UPON COMPLETION OF THE WORK.

DRAWINGS ARE NOT TO BE SCALED

NOVA TREND ENGINEERING SERVICES LTD.
119 West Beaver Creek Road, Unit 31
Richmond Hill, Ontario L4B 3M1
Tel: 905 882-5445
Fax: 905 882-5447
Email: cad@novatrending.com

DRAWING TITLE:
10/F
MECHANICAL LAYOUT

PROJECT TITLE:
ALEXANDRA PARK
XXX
TORONTO ONTARIO

DRAWN BY:	CHECKED BY:	SCALE:
G.S.	E.P.	1:50
DATE: FEB. 13	PROJECT NUMBER: 1313	DRAWING NUMBER: M-28 of 35

Drawing name: \\CADSERVER\Current Dwg\1313 - Alexandra Park\2015\1313M- 28(10F PLAN - MECHANICAL LAYOUT).dwg Plotted: Mar 12, 2014 - 3:43pm

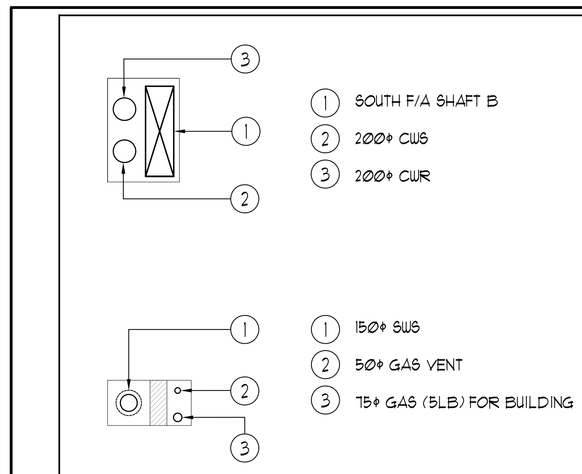

SOUTH PIPE SHAFT: 9/F -13/F — NTS

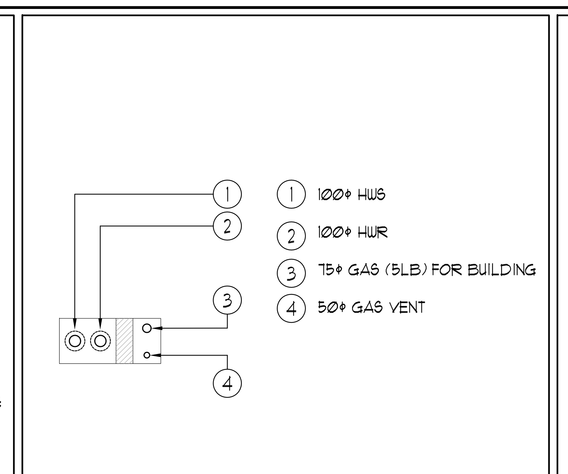

NORTH PIPE SHAFT A: 9/F -13/F — NTS

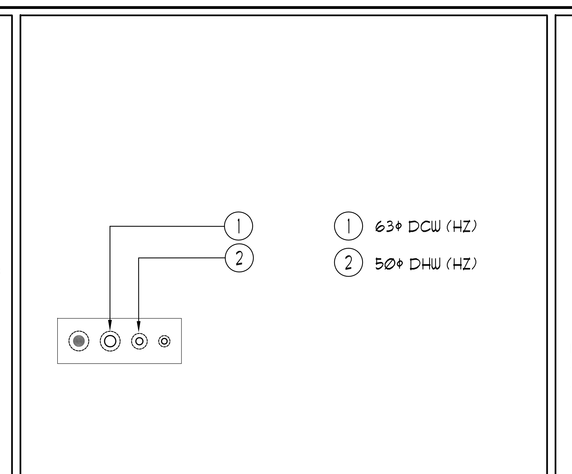

NORTH PIPE SHAFT B: 9/F -13/F — NTS

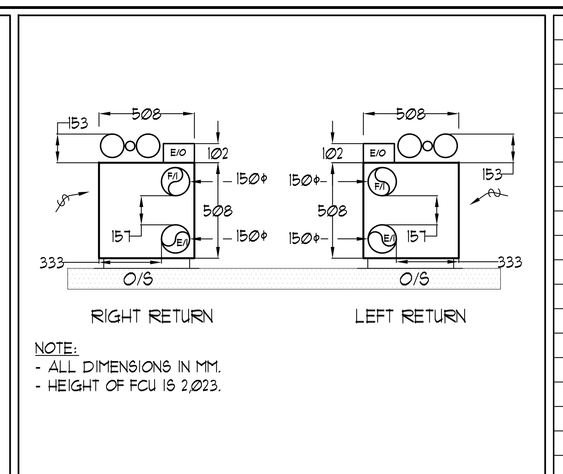

NOTE:
- ALL DIMENSIONS IN MM.
- HEIGHT OF FCU IS 2,023.

INSUITE FCU DIMENSIONS — NTS

UNIT	NAME	AREA (SQ. FT.)	# OF WR	# OF POWDER	SIZE (T)	FIXTURE UNITS	BR	SQ. FT/T

GENERAL NOTES:

1) CONTRACTOR SHALL CO-ORDINATE ARCHITECTURAL, STRUCTURAL, LIGHTING, HVAC, SPRINKLER DRAWINGS TO AVOID AREAS OF CONFLICT AND TO MAINTAIN CEILING HEIGHTS.

2) CONTRACTOR SHALL REPORT ALL DISCREPANCIES AND AREA OF CONFLICTS TO THE ENGINEER PRIOR TO WORK BEGINS.

3) PROVIDE EXPANSION CHAMBERS FOR ALL KITCHEN SINKS.

4) SEE INSTALLATION DETAILS DRAWING FOR WASHER DOM. H+C WATER, SANITARY CONNECTION DETAILS.

5) SUPPLY AND INSTALL COMPLETE DOMESTIC HOT AND COLD WATER LINES, SANITARY AND VENT LINES TO EACH FIXTURE /EQUIPMENT INCLUDING WATER CLOSETS, LAVATORIES, BATHS, SHOWERS, KITCHEN SINK, WASHING MACHINES, DISHWASHERS, AND FLOOR DRAINS. KITCHEN SINK, LAVATORIES, WATER CLOSETS AND WASHING MACHINE TO BE C/W LOCALIZED SHUT-OFF VALVES.

6) ALL VENT PIPE INSTALLATION TO COMPLY WITH PLUMBING CODES.

7) FOR D.H.C. W. RISER SIZES, REFER TO RISER DIAGRAM

8) FIRE DAMPERS ARE REQUIRED TO BE LISTED AND ARE TO HAVE FIRE PROTECTION RATING OF THE PENETRATED FIRE SEPARATION.

9) THE PIPING PENETRATING THE VARIOUS FIRE SEPARATION IS REQUIRED TO BE FIRESTOPPED WITH A LISTED FIRESTOPPING MATERIAL IN ACCORDANCE WITH OBC ARTICLE 3.1.9.1

10) THE FIRE HOSE CABINET THAT ARE RECESSED INTO THE EXIT STAIR SHAFTS ARE REQUIRED TO BE SEPARATED FROM THE EXIT STAIR BY A 2 HR. FIRE SEPARATION.

11) NO FLEXIBLE DUCT SHALL BE USED FOR ANY IN-SUITE DUCTWORK.

12) PROVIDE 25MM EXTERNAL INSULATION TO ENTIRE FRESH AIR DUCT FROM EXTERIOR WALL TO ERV FAN COIL UNIT.

13) DRYER EXHAUST DUCT SHALL BE SMOOTH AND CORROSION-RESISTANT MATERIAL (FLEXIBLE CONNECTION IS NOT ACCEPTABLE).

REFER TO DWG. M-X FOR ACOUSTIC NOTES

2850mm CLEAR FLOOR TO UNDERSLAB

NOTES:

1. SOUTH F/A SHAFT B FROM G/F TO 14/F DUCT SERVING CORRIDOR FROM 9/F TO 14/F. SEE VENTILATION RISER DIAGRAM FOR DETAILS.
2. NORTH F/A SERVING FROM G/F TO 14/F. F/A DUCT SERVING CORRIDOR FROM G/F TO 14/F. SEE VENTILATION RISER DIAGRAM FOR DETAILS.
3. PIPE SHAFT - REFER TO PIPE DIAGRAM FOR DETAILS.
4. 150ø KITCHEN / DRYER / WR / FCU INTAKE / FCU EXHAUST DUCT. (TYPICAL UNLESS OTHERWISE NOTED)

LEGEND
MECHANICAL

SYMBOL	DESCRIPTION
	SUPPLY AIR DIFFUSER
	SUPPLY AIR TROFFER
	LINEAR SUPPLY DIFFUSER
T	THERMOSTAT
S	FAN SWITCH
	RETURN AIR GRILLE
	EXHAUST AIR GRILLE
	SUPPLY DUCT UP
	SUPPLY DUCT DOWN
	RETURN DUCT UP
	RETURN DUCT DOWN
	EXHAUST DUCT UP
	EXHAUST DUCT DOWN
FD	FIRE DAMPER
BD	BALANCING DAMPER
MD	MOTORIZED DAMPER
MFD	MOTORIZED FIRE DAMPER
BDD	BACKDRAFT DAMPER
OBD	OPPOSED BLADE VOLUME CONTROL DAMPER C/W LOCKING QUADRANT
	TURNING VANES
	FLEXIBLE CONNECTION
	ACOUSTIC INSULATION
	TYPE OF EQUIPMENT / EQUIPMENT IDENTIFICATION
	TYPE OF DIFFUSER OR GRILLE / GRILLE SIZE OR DIFFUSER NECK SIZE / AIRFLOW (CFM OR L/s)
	STARTER (3 PHASE , 1 PHASE)
	IN-SUITE ERV MASTER SWITCH
	FAN SWITCH / IN-SUITE ERV OVERRIDE BUTTON
CO	CO SENSOR
G	GAS LINE
G	GAS METER
	GAS COCK
	PRESSURE REDUCING VALVE
	SANITARY ABOVE GRADE
	SANITARY BELOW GRADE
	STORM ABOVE GRADE
	STORM BELOW GRADE
	DOMESTIC COLD WATER
	DOMESTIC HOT WATER
	DOMESTIC HOT WATER RECIRCULATION
	SANITARY VENT
	WATER METER
FD	FLOOR DRAIN
FFD	FUNNEL FLOOR DRAIN
HD	HUB DRAIN
RD	ROOF DRAIN
BLD	BLAB DRAIN
AD	AREA DRAIN
BLAD	BI-LEVEL AREA DRAIN
CB	CATCH BASIN
	SANITARY TRAP
	ELBOW UP
	ELBOW DOWN
CO	WALL CLEANOUT
CO	FLOOR CLEANOUT
HB	HOSE BIBB
NFHB	NON-FREEZE HOSE BIBB
	GLOBE VALVE
	GATE VALVE
	BALL VALVE
	BUTTERFLY VALVE
	PRESSURE REDUCING VALVE
	CHECK VALVE
	CAP
	COMPRESSED AIR OUTLET
	BACKFLOW PREVENTER
	CIRCUIT BALANCING VALVE
	MULTIPLE PIPES / - DENOTES NO. OF PIPES
T	TEMPERATURE SENSOR
T	THERMOMETER
	2-WAY MODULATING VALVE
	3-WAY MODULATING VALVE
	10"x4"(D) THERMOWELL C/W 1/2" BUSHING + 1/2" PLUG
XXX	FLOOR ELEVATION ABOVE LEVEL
XXX	FLOOR ELEVATION THIS LEVEL
XXX	HEADROOM (FLOOR TO U/S HEIGHT)

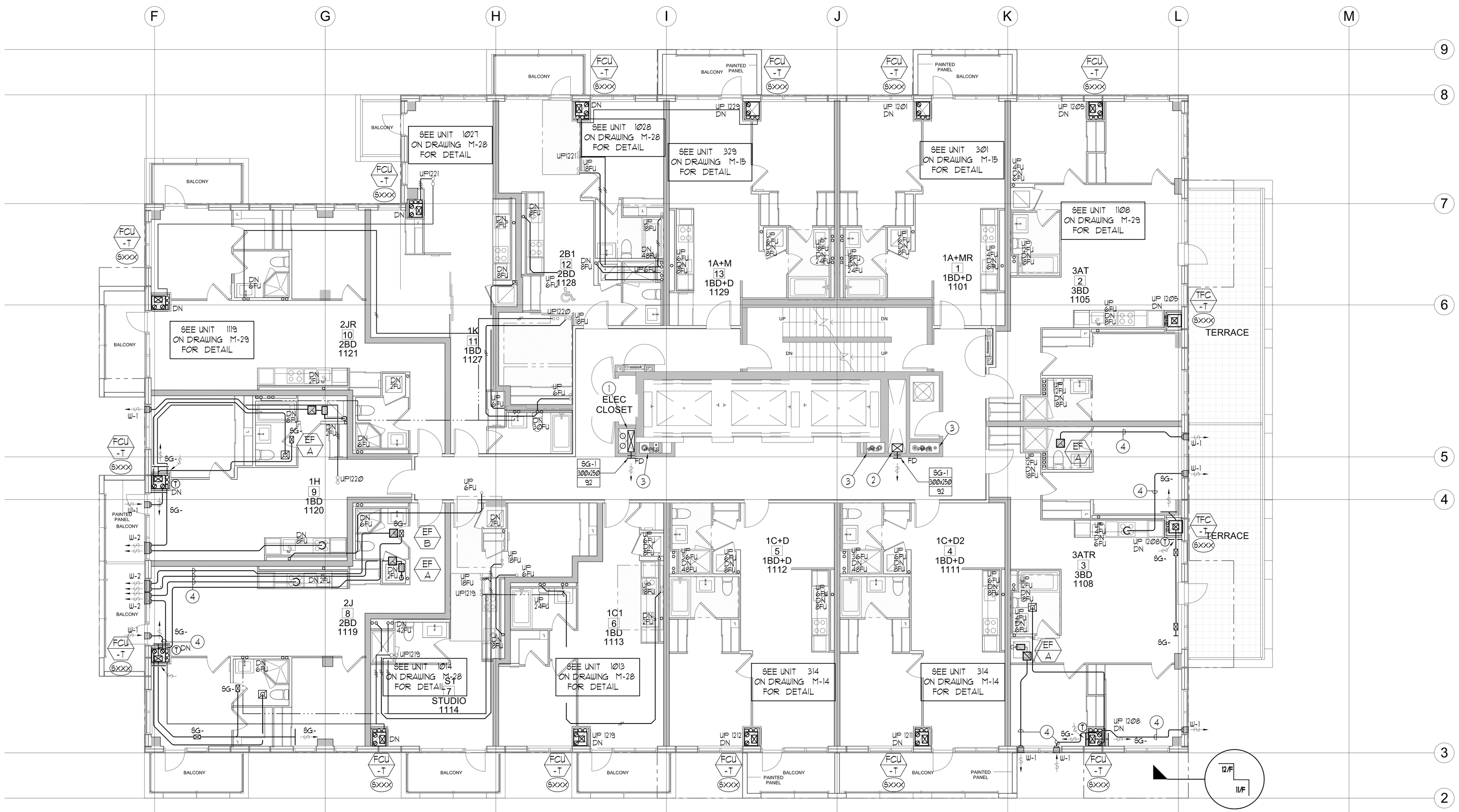

GRILLE SIZING TABLE		
DESIGNATION	SIZE	L/S UNLESS SPECIFIED ELSEWHERE
SG-A	300x100	47-70
SG-B	300x150	71-93
SG-C	400x150	94-140
SG-D	450x150	141-188
EG-A	150x150	35
W-1	225x200	210mm(L) INSULATED WALL BOX
W-2	425x200	
W-3	625x200	

VERTICAL FAN COIL SIZE		
DESIGNATION	MODEL	W x D
FCU-1T	450	508x660
FCU-1.5T	600	508x660
FCU-2T	800	508x660
FCU-2.5T	1000	559x660
FCU-3T	1200	559x660

NOTE:
A MIN. OF 125mm IS REQUIRED ON THE SIDE OF PIPE RISER.

DUCT SIZING TABLE (4.06 m/s, 800 FPM)					
DESIGNATION	L/s	DUCT SIZE	DESIGNATION	L/s	DUCT SIZE
A	47	100x150	G	189	350x150
B	71	150x150	H	236	450x150
C	94	200x150	J	283	500x150
D	118	200x150	K	330	600x150
E	141	250x150	L	377	500x200
F	165	300x150			

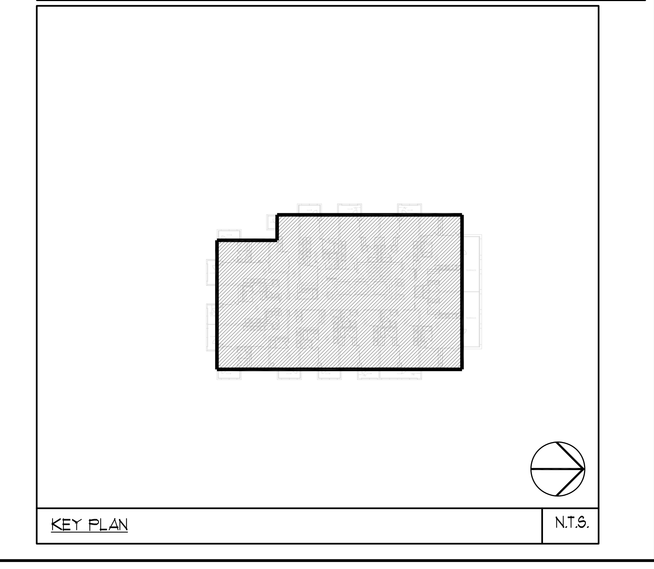

KEY PLAN — N.T.S.

PROJECT	1	ISSUED FOR ----	E.P.
DATE	NO.	DESCRIPTION	BY

THINK VOID ALL PRINTS DATED PREVIOUS TO FINAL DATE ABOVE

REVISIONS

CONTRACTOR MUST CHECK AND VERIFY ALL DIMENSIONS AND CONDITIONS ON THE JOB AND REPORT DISCREPANCIES TO THE ENGINEERS BEFORE PROCEEDING WITH THE WORK. THIS DRAWING IS THE PROPERTY OF THE ENGINEERS AND MUST BE RETURNED UPON COMPLETION OF THE WORK.

DRAWINGS ARE NOT TO BE SCALED

NOVA TREND ENGINEERING
179 West Beaver Creek Road, Unit 31
Richmond Hill, Ontario L4B 3M1
Tel: 905 882-5445
Fax: 905 882-5447
Email: cad@novatrendeng.com

DRAWING TITLE:
11/F
MECHANICAL LAYOUT

PROJECT TITLE:
ALEXANDRA PARK
XXX
TORONTO ONTARIO

DRAWN BY:	CHECKED BY:	SCALE:
G.S.	E.P.	1:50
DATE: FEB. 13	PROJECT NUMBER: 1313	DRAWING NUMBER: M-29 OF 39

Drawing name: \\CADSERVER\Current Dwg's\1313 - Alexandra Park\DWG's\1313M - 29(11F PLAN - MECHANICAL LAYOUT).dwg Plotted: Mar 12, 2014 - 3:44pm

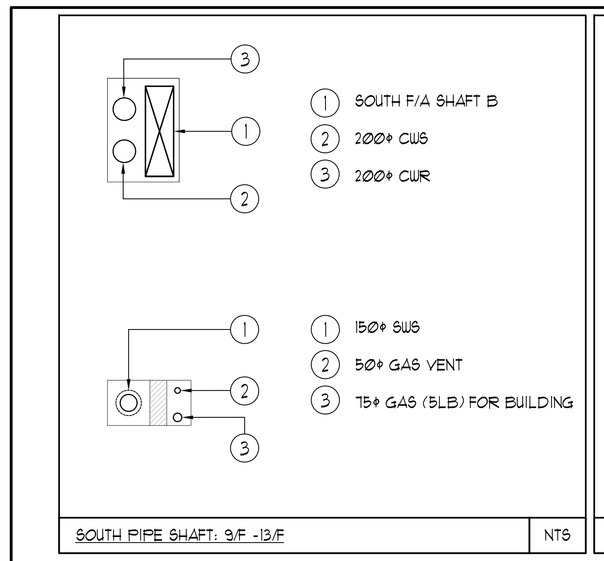

SOUTH PIPE SHAFT, 9/F -13/F — NTS

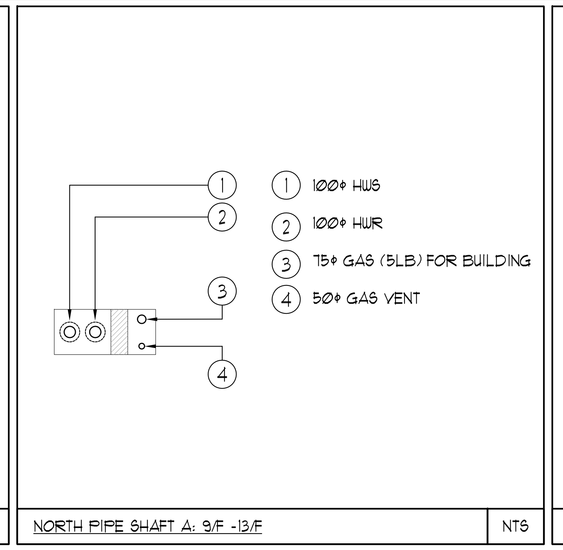

NORTH PIPE SHAFT A, 9/F -13/F — NTS

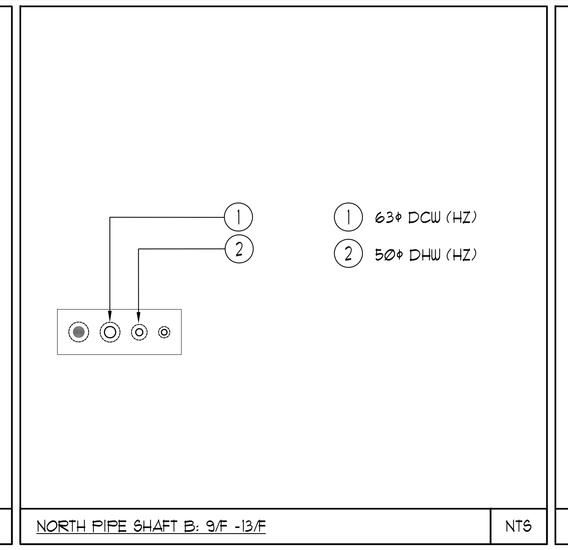

NORTH PIPE SHAFT B, 9/F -13/F — NTS

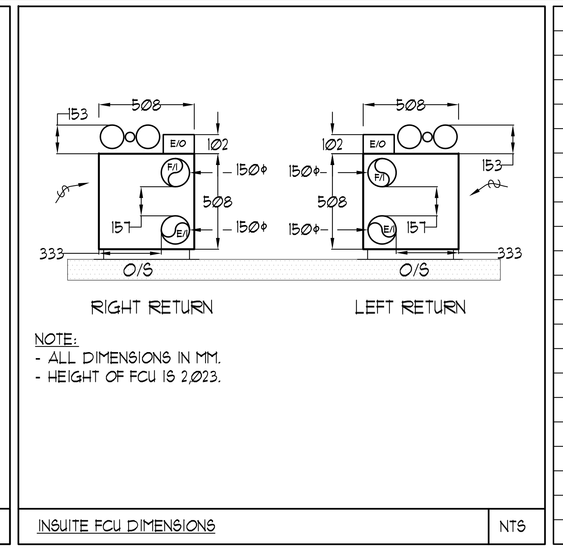

NOTE:
- ALL DIMENSIONS IN MM.
- HEIGHT OF FCU IS 2,023.

INSUITE FCU DIMENSIONS — NTS

UNIT	NAME	AREA (SQ. FT.)	# OF W/R	# OF POWDER	SIZE (T)	FIXTURE UNITS	BR	SQ. FT/T

GENERAL NOTES:

1) CONTRACTOR SHALL CO-ORDINATE ARCHITECTURAL, STRUCTURAL, LIGHTING, HVAC, SPRINKLER DRAWINGS TO AVOID AREAS OF CONFLICT AND TO MAINTAIN CEILING HEIGHTS.

2) CONTRACTOR SHALL REPORT ALL DISCREPANCIES AND AREA OF CONFLICTS TO THE ENGINEER PRIOR TO WORK BEGINS.

3) PROVIDE EXPANSION CHAMBERS FOR ALL KITCHEN SINKS.

4) SEE INSTALLATION DETAILS DRAWING FOR WASHER DOM. H+C WATER, SANITARY CONNECTION DETAILS.

5) SUPPLY AND INSTALL COMPLETE DOMESTIC HOT AND COLD WATER LINES, SANITARY AND VENT LINES TO EACH FIXTURE /EQUIPMENT INCLUDING WATER CLOSETS, LAVATORIES, BATHS, SHOWERS, KITCHEN SINK, WASHING MACHINES, DISHWASHERS, AND FLOOR DRAINS. KITCHEN SINK, LAVATORIES, WATER CLOSETS AND WASHING MACHINE TO BE C/W LOCALIZED SHUT-OFF VALVES.

6) ALL VENT PIPE INSTALLATION TO COMPLY WITH PLUMBING CODES.

7) FOR D.H.+C. W. RISER SIZES, REFER TO RISER DIAGRAM

8) FIRE DAMPERS ARE REQUIRED TO BE LISTED AND ARE TO HAVE FIRE PROTECTION RATING OF THE PENETRATED FIRE SEPARATION.

9) THE PIPING PENETRATING THE VARIOUS FIRE SEPARATION IS REQUIRED TO BE FIRESTOPPED WITH A LISTED FIRESTOPPING MATERIAL IN ACCORDANCE WITH OBC ARTICLE 3.1.9.1

10) THE FIRE HOSE CABINET THAT ARE RECESSED INTO THE EXIT STAIR SHAFTS ARE REQUIRED TO BE SEPARATED FROM THE EXIT STAIR BY A 2 HR. FIRE SEPARATION.

11) NO FLEXIBLE DUCT SHALL BE USED FOR ANY IN-SUITE DUCTWORK.

12) PROVIDE 25MM EXTERNAL INSULATION TO ENTIRE FRESH AIR DUCT FROM EXTERIOR WALL TO ERV FAN COIL UNIT.

13) DRYER EXHAUST DUCT SHALL BE SMOOTH AND CORROSION-RESISTANT MATERIAL (FLEXIBLE CONNECTION IS NOT ACCEPTABLE).

REFER TO DWG. M-X FOR ACOUSTIC NOTES

2750mm CLEAR FLOOR TO UNDERSLAB

NOTES:

1. SOUTH F/A SHAFT B FROM G/F TO 14/F DUCT SERVING CORRIDOR FROM 9/F TO 14/F. SEE VENTILATION RISER DIAGRAM FOR DETAILS.
2. NORTH F/A SERVING FROM G/F TO 14/F. F/A DUCT SERVING CORRIDOR FROM G/F TO 14/F. SEE VENTILATION RISER DIAGRAM FOR DETAILS.
3. PIPE SHAFT - REFER TO PIPE DIAGRAM FOR DETAILS.
4. 150ø KITCHEN / DRYER / W/R / FCU INTAKE / FCU EXHAUST DUCT. (TYPICAL UNLESS OTHERWISE NOTED)

LEGEND
MECHANICAL

SYMBOL	DESCRIPTION
	SUPPLY AIR DIFFUSER
	SUPPLY AIR TROFFER
	LINEAR SUPPLY DIFFUSER
T	THERMOSTAT
S	FAN SWITCH
	RETURN AIR GRILLE
	EXHAUST AIR GRILLE
	SUPPLY DUCT UP
	SUPPLY DUCT DOWN
	RETURN DUCT UP
	RETURN DUCT DOWN
	EXHAUST DUCT UP
	EXHAUST DUCT DOWN
FD	FIRE DAMPER
BD	BALANCING DAMPER
MD	MOTORIZED DAMPER
MFD	MOTORIZED FIRE DAMPER
BDD	BACKDRAFT DAMPER
OBD	OPPOSED BLADE VOLUME CONTROL DAMPER C/W LOCKING QUADRANT
	TURNING VANES
	FLEXIBLE CONNECTION
	ACOUSTIC INSULATION
	TYPE OF EQUIPMENT / EQUIPMENT IDENTIFICATION
	TYPE OF DIFFUSER OR GRILLE / GRILLE SIZE OR DIFFUSER NECK SIZE / AIRFLOW (CFM OR L/S)
	STARTER (3 PHASE , 1 PHASE)
	IN-SUITE ERV MASTER SWITCH
	FAN SWITCH / IN-SUITE ERV OVERRIDE BUTTON
CO	CO SENSOR
G	GAS LINE
G	GAS METER
	GAS COCK
	PRESSURE REDUCING VALVE
	SANITARY ABOVE GRADE
	SANITARY BELOW GRADE
	STORM ABOVE GRADE
	STORM BELOW GRADE
	DOMESTIC COLD WATER
	DOMESTIC HOT WATER
	DOMESTIC HOT WATER RECIRCULATION
	SANITARY VENT
	WATER METER
FD	FLOOR DRAIN
FFD	FUNNEL FLOOR DRAIN
HD	HUB DRAIN
RD	ROOF DRAIN
BLD	BLAB DRAIN
AD	AREA DRAIN
BLAD	BI-LEVEL AREA DRAIN
CB	CATCH BASIN
	SANITARY TRAP
	ELBOW UP
	ELBOW DOWN
CO	WALL CLEANOUT
CO	FLOOR CLEANOUT
HB	HOSE BIBB
NFHB	NON-FREEZE HOSE BIBB
	GLOBE VALVE
	GATE VALVE
	BALL VALVE
	BUTTERFLY VALVE
	PRESSURE REDUCING VALVE
	CHECK VALVE
	CAP
	COMPRESSED AIR OUTLET
	BACKFLOW PREVENTER
	CIRCUIT BALANCING VALVE
	MULTIPLE PIPES / - DENOTES NO. OF PIPES
T	TEMPERATURE SENSOR
T	THERMOMETER
	2-WAY MODULATING VALVE
	3-WAY MODULATING VALVE
	10"x4"(D) THERMOWELL C/W 1/2" BUSHING + 1/2" PLUG
	FLOOR ELEVATION ABOVE LEVEL
	FLOOR ELEVATION THIS LEVEL
	HEADROOM (FLOOR TO U/S HEIGHT)

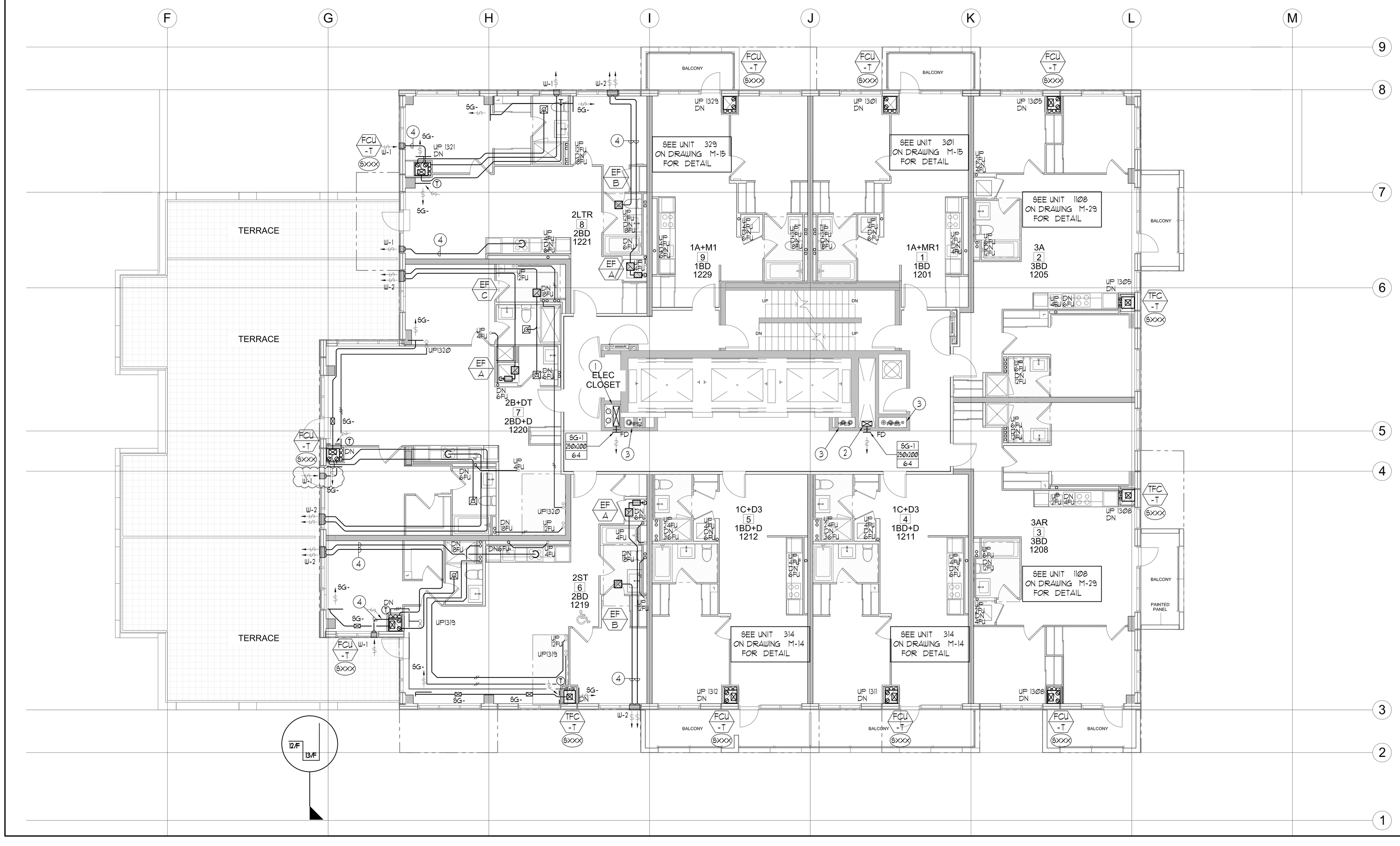

GRILLE SIZING TABLE		
DESIGNATION	SIZE	L/S (UNLESS SPECIFIED ELSEWHERE)
SG-A	300x100	47-70
SG-B	300x150	71-93
SG-C	400x150	94-140
SG-D	450x150	141-188
EG-A	150x150	35
W-1	225x200	210mm(L)
W-2	425x200	INSULATED
W-3	625x200	WALL BOX

VERTICAL FAN COIL SIZE		
DESIGNATION	MODEL	W x D
FCU-1T	450	508x660
FCU-1.5T	600	508x660
FCU-2T	800	508x660
FCU-2.5T	1000	559x660
FCU-3T	1200	559x660

NOTE:
A MIN. OF 125mm IS REQUIRED ON THE SIDE OF PIPE RISER.

DUCT SIZING TABLE (4.06 m/s, 800 FPM)					
DESIGNATION	L/s	DUCT SIZE	DESIGNATION	L/s	DUCT SIZE
A	47	100x150	G	189	350x150
B	71	150x150	H	236	450x150
C	94	200x150	J	283	500x150
D	118	200x150	K	330	600x150
E	141	250x150	L	377	500x200
F	165	300x150			

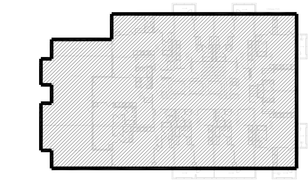

KEY PLAN — N.T.S.

REV/DD/YY			ISSUED FOR ----		E.P.
DATE	NO		DESCRIPTION		BY

MARK VOID ALL PRINTS DATED PREVIOUS TO FINAL DATE ABOVE

REVISIONS

CONTRACTOR MUST CHECK AND VERIFY ALL DIMENSIONS AND CONDITIONS ON THE JOB AND REPORT DISCREPANCIES TO THE ENGINEERS BEFORE PROCEEDING WITH THE WORK. THIS DRAWING IS THE PROPERTY OF THE ENGINEERS AND MUST BE RETURNED UPON COMPLETION OF THE WORK.

DRAWINGS ARE NOT TO BE SCALED

NOVA TREND ENGINEERING GROUP LTD.
118 West Beaver Creek Road, Unit 31
Richmond Hill, Ontario L4B 3M1
Tel: 905 882-5445
Fax: 905 882-5447
Email: cad@novatrendeng.com

DRAWING TITLE:
12/F
MECHANICAL LAYOUT

PROJECT TITLE:
ALEXANDRA PARK
XXX
TORONTO, ONTARIO

DRAWN BY:	CHECKED BY:	SCALE:
G.S.	E.P.	1:50
DATE: FEB. 13	PROJECT NUMBER: 1313	DRAWING NUMBER: M-30 OF 39

Drawing name: \\CADSERVER\Current Dwg\13\1313 - Alexandra Park\2d\TS\1313M-30 12/F PLAN - MECHANICAL LAYOUT.dwg Plotted: Mar 12, 2014 - 3:44pm

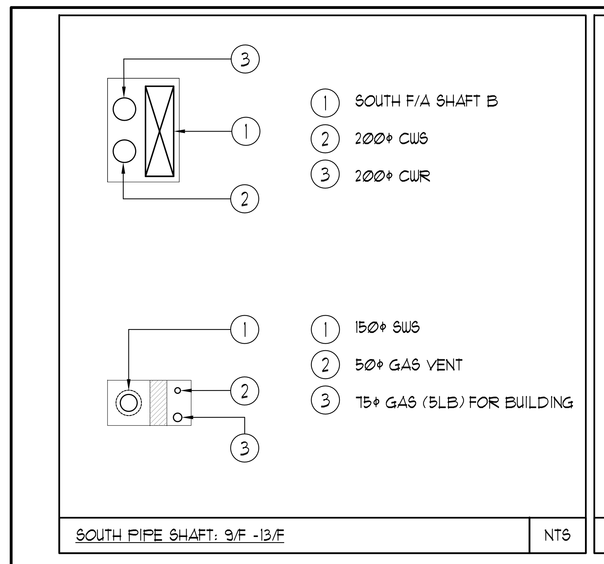

SOUTH PIPE SHAFT: 9/F -13/F — NTS

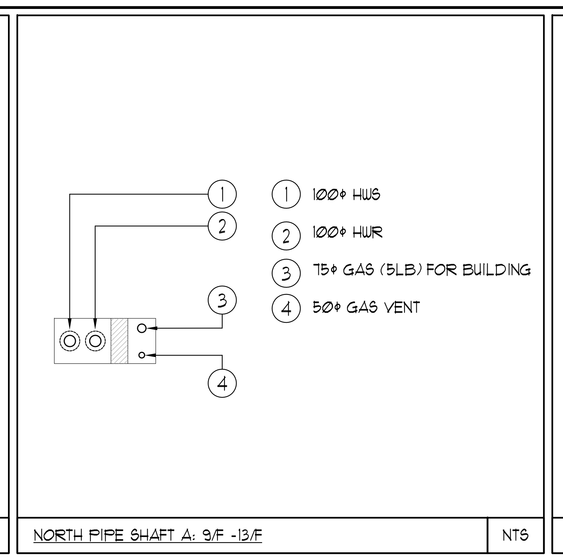

NORTH PIPE SHAFT A: 9/F -13/F — NTS

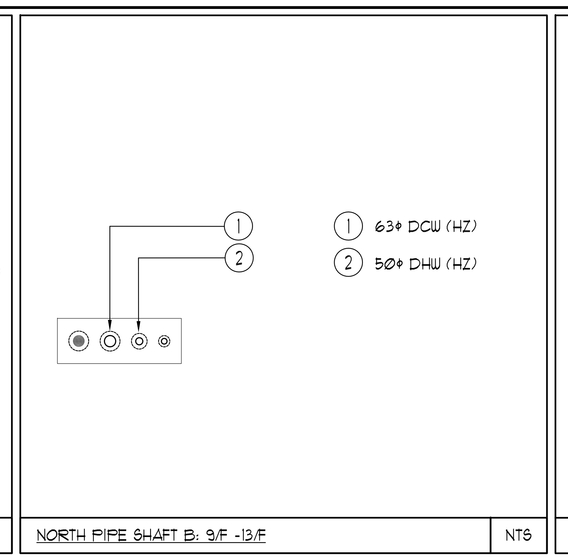

NORTH PIPE SHAFT B: 9/F -13/F — NTS

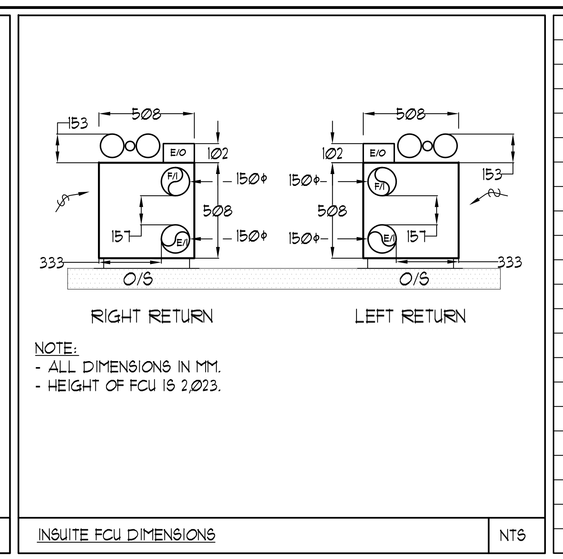

NOTE:
- ALL DIMENSIONS IN MM.
- HEIGHT OF FCU IS 2,023.

INSUITE FCU DIMENSIONS — NTS

UNIT	NAME	AREA (SQ. FT.)	# OF WR	# OF POWDER	SIZE (T)	FIXTURE UNITS	BR	SQ. FT/T

GENERAL NOTES:

1) CONTRACTOR SHALL CO-ORDINATE ARCHITECTURAL, STRUCTURAL, LIGHTING, HVAC, SPRINKLER DRAWINGS TO AVOID AREAS OF CONFLICT AND TO MAINTAIN CEILING HEIGHTS.

2) CONTRACTOR SHALL REPORT ALL DISCREPANCIES AND AREA OF CONFLICTS TO THE ENGINEER PRIOR TO WORK BEGINS.

3) PROVIDE EXPANSION CHAMBERS FOR ALL KITCHEN SINKS.

4) SEE INSTALLATION DETAILS DRAWING FOR WASHER DOM. H+C WATER, SANITARY CONNECTION DETAILS.

5) SUPPLY AND INSTALL COMPLETE DOMESTIC HOT AND COLD WATER LINES, SANITARY AND VENT LINES TO EACH FIXTURE /EQUIPMENT INCLUDING WATER CLOSETS, LAVATORIES, BATHS, SHOWERS, KITCHEN SINK, WASHING MACHINES, DISHWASHERS, AND FLOOR DRAINS. KITCHEN SINK, LAVATORIES, WATER CLOSETS AND WASHING MACHINE TO BE C/W LOCALIZED SHUT-OFF VALVES.

6) ALL VENT PIPE INSTALLATION TO COMPLY WITH PLUMBING CODES.

7) FOR D.H.C. W. RISER SIZES, REFER TO RISER DIAGRAM

8) FIRE DAMPERS ARE REQUIRED TO BE LISTED AND ARE TO HAVE FIRE PROTECTION RATING OF THE PENETRATED FIRE SEPARATION.

9) THE PIPING PENETRATING THE VARIOUS FIRE SEPARATION IS REQUIRED TO BE FIRESTOPPED WITH A LISTED FIRESTOPPING MATERIAL IN ACCORDANCE WITH OBC ARTICLE 3.1.9.1

10) THE FIRE HOSE CABINET THAT ARE RECESSED INTO THE EXIT STAIR SHAFTS ARE REQUIRED TO BE SEPARATED FROM THE EXIT STAIR BY A 2 HR. FIRE SEPARATION.

11) NO FLEXIBLE DUCT SHALL BE USED FOR ANY IN-SUITE DUCTWORK.

12) PROVIDE 25MM EXTERNAL INSULATION TO ENTIRE FRESH AIR DUCT FROM EXTERIOR WALL TO ERV FAN COIL UNIT.

13) DRYER EXHAUST DUCT SHALL BE SMOOTH AND CORROSION-RESISTANT MATERIAL (FLEXIBLE CONNECTION IS NOT ACCEPTABLE).

REFER TO DWG. M-X FOR ACOUSTIC NOTES

⚠ 3050mm CLEAR FLOOR TO UNDERSLAB

NOTES:

1. SOUTH F/A SHAFT B FROM G/F TO 14/F DUCT SERVING CORRIDOR FROM 9/F TO 14/F. SEE VENTILATION RISER DIAGRAM FOR DETAILS.
2. NORTH F/A SERVING FROM G/F TO 14/F. F/A DUCT SERVING CORRIDOR FROM G/F TO 14/F. SEE VENTILATION RISER DIAGRAM FOR DETAILS.
3. PIPE SHAFT - REFER TO PIPE DIAGRAM FOR DETAILS.
4. 150ø KITCHEN / DRYER / W/R / FCU INTAKE / FCU EXHAUST DUCT. (TYPICAL UNLESS OTHERWISE NOTED)

LEGEND
MECHANICAL

SYMBOL	DESCRIPTION
	SUPPLY AIR DIFFUSER
	SUPPLY AIR TROFFER
	LINEAR SUPPLY DIFFUSER
T	THERMOSTAT
S	FAN SWITCH
	RETURN AIR GRILLE
	EXHAUST AIR GRILLE
	SUPPLY DUCT UP
	SUPPLY DUCT DOWN
	RETURN DUCT UP
	RETURN DUCT DOWN
	EXHAUST DUCT UP
	EXHAUST DUCT DOWN
FD	FIRE DAMPER
BD	BALANCING DAMPER
MD	MOTORIZED DAMPER
MFD	MOTORIZED FIRE DAMPER
BDD	BACKDRAFT DAMPER
OBD	OPPOSED BLADE VOLUME CONTROL DAMPER C/W LOCKING QUADRANT
	TURNING VANES
	FLEXIBLE CONNECTION
	ACOUSTIC INSULATION
X	TYPE OF EQUIPMENT EQUIPMENT IDENTIFICATION
XX/XX	TYPE OF DIFFUSER OR GRILLE GRILLE SIZE OR DIFFUSER NECK SIZE AIRFLOW (CFM OR L/S)
XX, Y	STARTER (3 PHASE , 1 PHASE)
S	IN-SUITE ERV MASTER SWITCH
S	FAN SWITCH / IN-SUITE ERV OVERRIDE BUTTON
CO	CO SENSOR
G	GAS LINE
G	GAS METER
G	GAS COCK
PR	PRESSURE REDUCING VALVE
	SANITARY ABOVE GRADE
	SANITARY BELOW GRADE
	STORM ABOVE GRADE
	STORM BELOW GRADE
	DOMESTIC COLD WATER
	DOMESTIC HOT WATER
	DOMESTIC HOT WATER RECIRCULATION
V	SANITARY VENT
	WATER METER
FD	FLOOR DRAIN
FFD	FUNNEL FLOOR DRAIN
HD	HUB DRAIN
RD	ROOF DRAIN
BLD	BLAB DRAIN
AD	AREA DRAIN
BLAD	BI-LEVEL AREA DRAIN
CB	CATCH BASIN
	SANITARY TRAP
	ELBOW UP
	ELBOW DOWN
CO	WALL CLEANOUT
CO	FLOOR CLEANOUT
HB	HOSE BIBB
NFHB	NON-FREEZE HOSE BIBB
	GLOBE VALVE
	GATE VALVE
	BALL VALVE
	BUTTERFLY VALVE
	PRESSURE REDUCING VALVE
	CHECK VALVE
	CAP
	COMPRESSED AIR OUTLET
	BACKFLOW PREVENTER
	CIRCUIT BALANCING VALVE
	MULTIPLE PIPES / - DENOTES NO. OF PIPES
T	TEMPERATURE SENSOR
T	THERMOSTER
	2-WAY MODULATING VALVE
	3-WAY MODULATING VALVE
	1/2"x4"/2" THERMOWELL C/W 1/2" BUSHING x 1/2" PLUG
XXX	FLOOR ELEVATION ABOVE LEVEL
XXX	FLOOR ELEVATION THIS LEVEL
XXX	HEADROOM (FLOOR TO U/S HEIGHT)

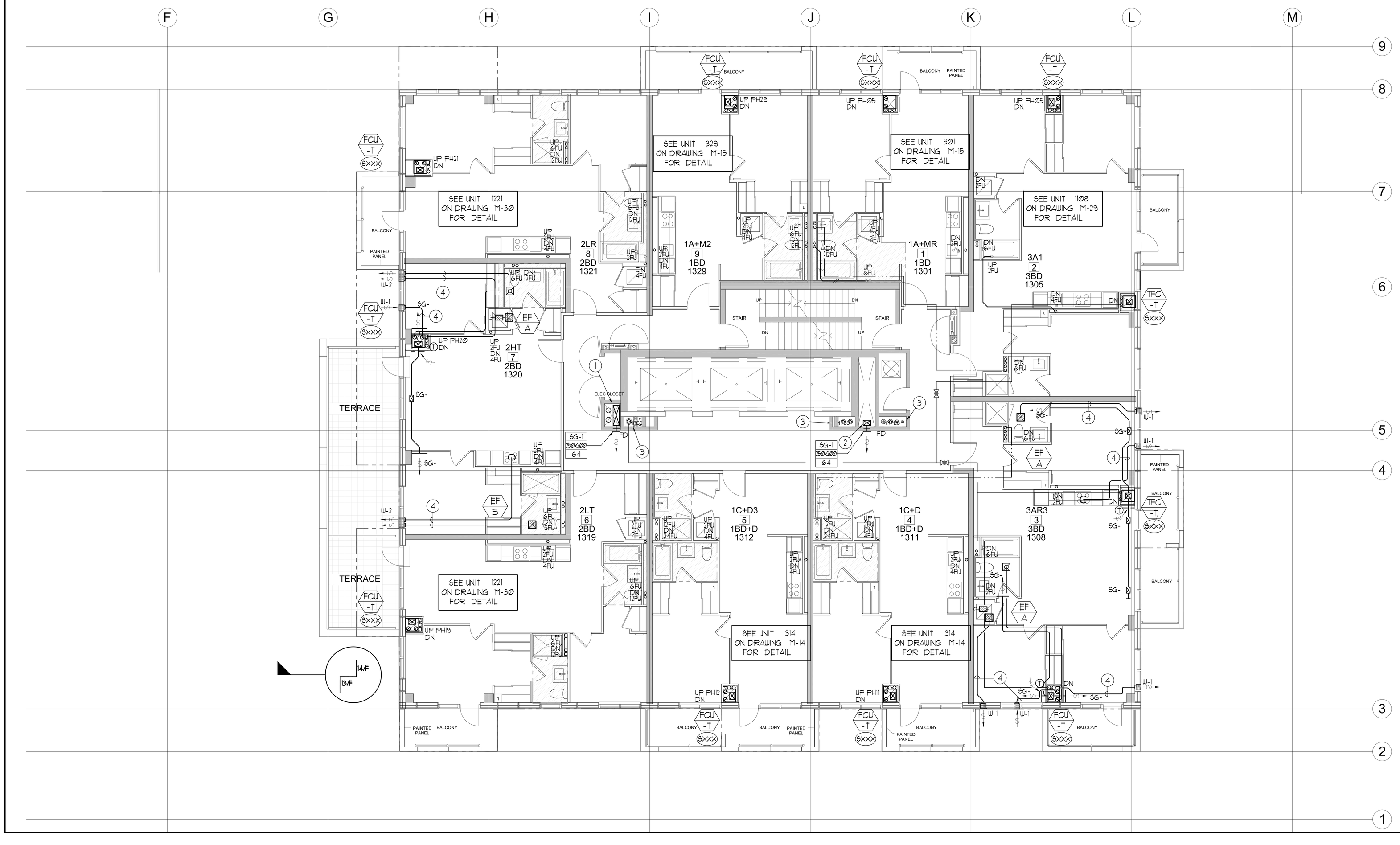

GRILLE SIZING TABLE

DESIGNATION	SIZE	L/s (UNLESS SPECIFIED ELSEWHERE)
SG-A	300x100	47-70
SG-B	300x150	71-93
SG-C	400x150	94-140
SG-D	450x150	141-188
EG-A	150x150	35
W-1	225x200	210mm(L)
W-2	425x200	INSULATED
W-3	625x200	WALL BOX

VERTICAL FAN COIL SIZE

DESIGNATION	MODEL	W x D
FCU-1T	450	508x660
FCU-1.5T	600	508x660
FCU-2T	800	508x660
FCU-2.5T	1000	559x660
FCU-3T	1200	559x660

NOTE:
A MIN. OF 125mm IS REQUIRED ON THE SIDE OF PIPE RISER.

DUCT SIZING TABLE
(4.06 m/s, 800 FPM)

DESIGNATION	L/s	DUCT SIZE	DESIGNATION	L/s	DUCT SIZE
A	47	100x150	G	189	350x150
B	71	150x150	H	236	450x150
C	94	200x150	J	283	500x150
D	118	200x150	K	330	600x150
E	141	250x150	L	377	500x200
F	165	300x150			

KEY PLAN — N.T.S.

REVISIONS			
REVISION	1	ISSUED FOR ---	E.P.
DATE	NO.	DESCRIPTION	BY

PLANK VOID: ALL PRINTS DATED PREVIOUS TO FINAL DATE ABOVE

REVISIONS

CONTRACTOR MUST CHECK AND VERIFY ALL DIMENSIONS AND CONDITIONS ON THE JOB AND REPORT DISCREPANCIES TO THE ENGINEERS BEFORE PROCEEDING WITH THE WORK. THIS DRAWING IS THE PROPERTY OF THE ENGINEERS AND MUST BE RETURNED UPON COMPLETION OF THE WORK.

DRAWINGS ARE NOT TO BE SCALED

NOVA TREND ENGINEERING
178 West Beaver Creek Road, Unit 31
Richmond Hill, Ontario L4B 3M1
Tel: 905 882-5445
Fax: 905 882-5447
Email: cad@novatrendeng.com

DRAWING TITLE:
13/F
MECHANICAL LAYOUT

PROJECT TITLE:
ALEXANDRA PARK
XXX
TORONTO ONTARIO

DRAWN BY:	CHECKED BY:	SCALE:
G.S.	E.P.	1:50
DATE: FEB. 13	PROJECT NUMBER: 1313	DRAWING NUMBER: M-31 OF 39

Drawing name: \\CADSERVER\Current Dwg\1313 - Alexandra Park\1313-13.Dwg - 3D\3F PLAN - MECHANICAL LAYOUT.dwg Plotted: Mar 12, 2014 - 3:44pm

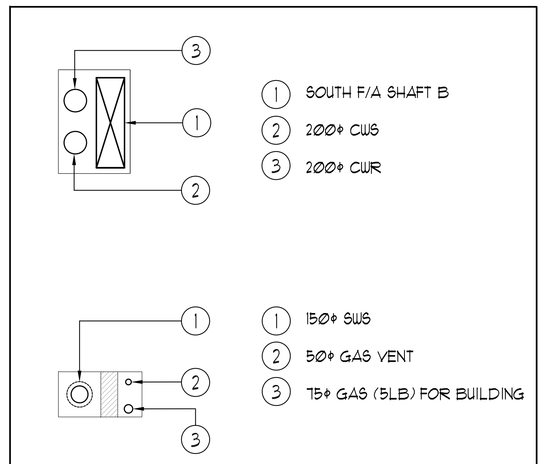

SOUTH PIPE SHAFT: 14/F — NTS

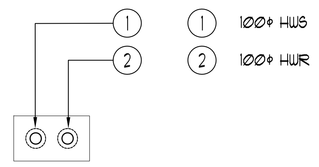

NORTH PIPE SHAFT A: 14/F — NTS

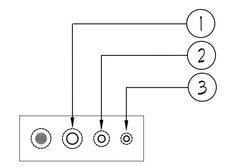

NORTH PIPE SHAFT B: 14/F — NTS

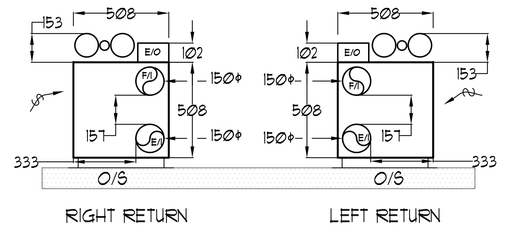

NOTE:
- ALL DIMENSIONS IN MM.
- HEIGHT OF FCU IS 2,023.

INSUITE FCU DIMENSIONS — NTS

UNIT	NAME	AREA (SQ. FT.)	# OF W/R	# OF POWDER	SIZE (T)	FIXTURE UNITS	BR	SQ. FT/T

GRILLE SIZING TABLE		
DESIGNATION	SIZE	L/s (UNLESS SPECIFIED ELSEWHERE)
SG-A	300x100	47-70
SG-B	300x150	71-93
SG-C	400x150	94-140
SG-D	450x150	141-188
EG-A	150x150	35
W-1	225x200	210mm(L)
W-2	425x200	INSULATED
W-3	625x200	WALL BOX

VERTICAL FAN COIL SIZE		
DESIGNATION	MODEL	W x D
FCU-1T	450	500x660
FCU-1.5T	600	500x660
FCU-2T	800	500x660
FCU-2.5T	1000	553x660
FCU-3T	1200	553x660

NOTE:
A MIN. OF 125mm IS REQUIRED ON THE SIDE OF PIPE RISER.

DUCT SIZING TABLE (4.0L/s/m, 800 FPM)					
DESIGNATION	L/s	DUCT SIZE	DESIGNATION	L/s	DUCT SIZE
A	47	100x150	G	189	350x150
B	71	150x150	H	236	450x150
C	94	200x150	J	283	500x150
D	118	200x150	K	330	600x150
E	141	250x150	L	377	500x200
F	165	300x150			

GENERAL NOTES:

1) CONTRACTOR SHALL CO-ORDINATE ARCHITECTURAL, STRUCTURAL, LIGHTING, HVAC, SPRINKLER DRAWINGS TO AVOID AREAS OF CONFLICT AND TO MAINTAIN CEILING HEIGHTS.

2) CONTRACTOR SHALL REPORT ALL DISCREPANCIES AND AREA OF CONFLICTS TO THE ENGINEER PRIOR TO WORK BEGINS.

3) PROVIDE EXPANSION CHAMBERS FOR ALL KITCHEN SINKS.

4) SEE INSTALLATION DETAILS DRAWING FOR WASHER DOM. H4C WATER, SANITARY CONNECTION DETAILS.

5) SUPPLY AND INSTALL COMPLETE DOMESTIC HOT AND COLD WATER LINES, SANITARY AND VENT LINES TO EACH FIXTURE /EQUIPMENT INCLUDING WATER CLOSETS, LAVATORIES, BATHS, SHOWERS, KITCHEN SINK, WASHING MACHINES, DISHWASHERS, AND FLOOR DRAINS. KITCHEN SINK, LAVATORIES, WATER CLOSETS AND WASHING MACHINE TO BE C/W LOCALIZED SHUT-OFF VALVES.

6) ALL VENT PIPE INSTALLATION TO COMPLY WITH PLUMBING CODES.

7) FOR D.H.4C. W. RISER SIZES, REFER TO RISER DIAGRAM

8) FIRE DAMPERS ARE REQUIRED TO BE LISTED AND ARE TO HAVE FIRE PROTECTION RATING OF THE PENETRATED FIRE SEPARATION.

9) THE PIPING PENETRATING THE VARIOUS FIRE SEPARATION IS REQUIRED TO BE FIRESTOPPED WITH A LISTED FIRESTOPPING MATERIAL IN ACCORDANCE WITH OBC ARTICLE 3.1.9.1

10) THE FIRE HOSE CABINET THAT ARE RECESSED INTO THE EXIT STAIR SHAFTS ARE REQUIRED TO BE SEPARATED FROM THE EXIT STAIR BY A 2 HR. FIRE SEPARATION.

11) NO FLEXIBLE DUCT SHALL BE USED FOR ANY IN-SUITE DUCTWORK.

12) PROVIDE 25MM EXTERNAL INSULATION TO ENTIRE FRESH AIR DUCT FROM EXTERIOR WALL TO ERV FAN COIL UNIT.

13) DRYER EXHAUST DUCT SHALL BE SMOOTH AND CORROSION-RESISTANT MATERIAL (FLEXIBLE CONNECTION IS NOT ACCEPTABLE).

REFER TO DWG. M-X FOR ACOUSTIC NOTES

3270mm CLEAR FLOOR TO UNDERSLAB

NOTES:

1. SOUTH F/A SHAFT B FROM G/F TO 14/F DUCT SERVING CORRIDOR FROM G/F TO 14/F. SEE VENTILATION RISER DIAGRAM FOR DETAILS.
2. NORTH F/A SERVING FROM G/F TO 14/F. F/A DUCT SERVING CORRIDOR FROM G/F TO 14/F. SEE VENTILATION RISER DIAGRAM FOR DETAILS.
3. PIPE SHAFT - REFER TO PIPE DIAGRAM FOR DETAILS.
4. 150φ KITCHEN / DRYER / W/R / FCU INTAKE / FCU EXHAUST DUCT. (TYPICAL UNLESS OTHERWISE NOTED)
5. SEE DWG. M-33 FOR PIPING CONNECTION DETAIL.

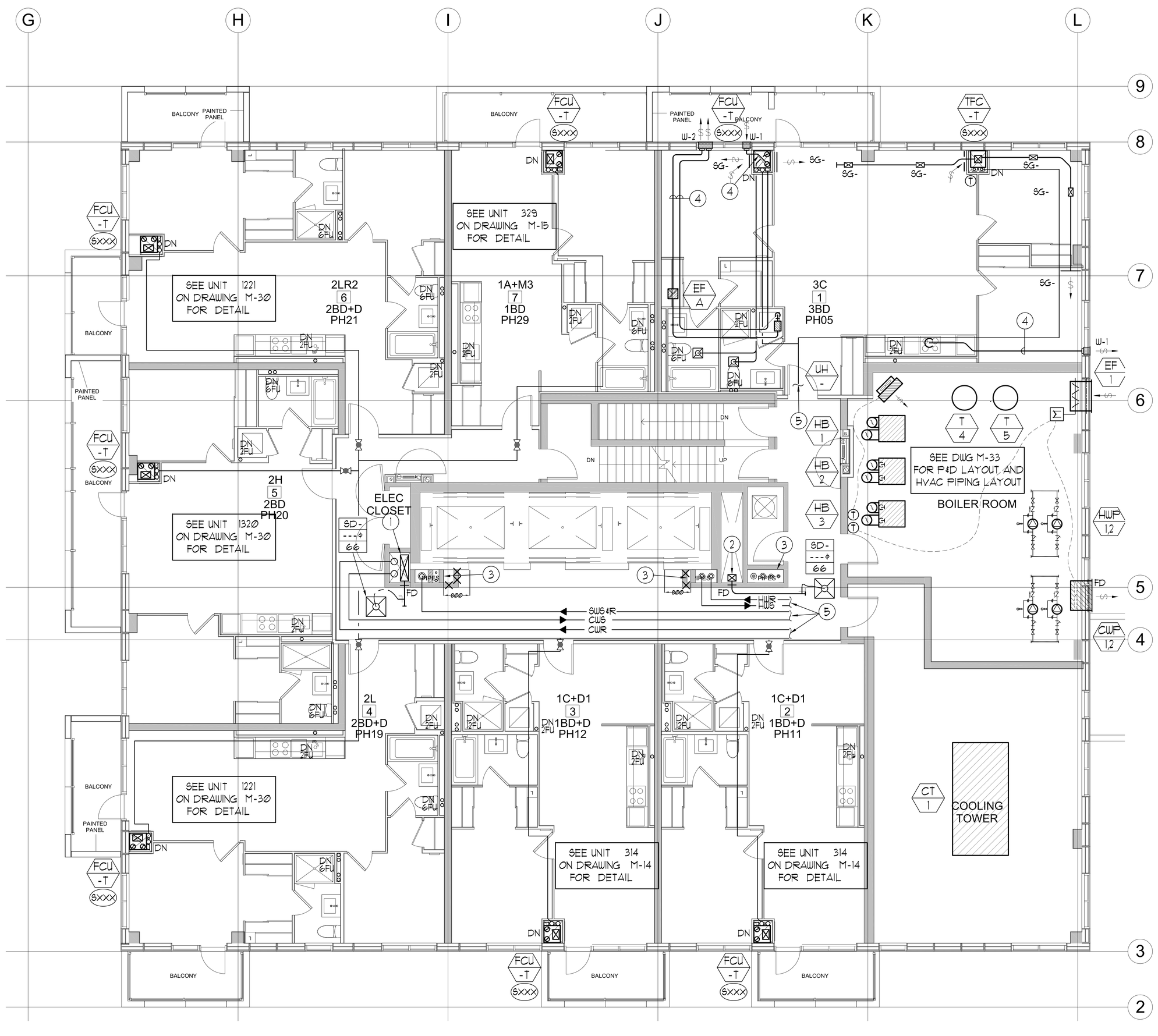

LEGEND
MECHANICAL

SYMBOL	DESCRIPTION
	SUPPLY AIR DIFFUSER
	SUPPLY AIR TROFFER
	LINEAR SUPPLY DIFFUSER
T	THERMOSTAT
S	FAN SWITCH
	RETURN AIR GRILLE
	EXHAUST AIR GRILLE
	SUPPLY DUCT UP
	SUPPLY DUCT DOWN
	RETURN DUCT UP
	RETURN DUCT DOWN
	EXHAUST DUCT UP
	EXHAUST DUCT DOWN
FD	FIRE DAMPER
BD	BALANCING DAMPER
MD	MOTORIZED DAMPER
MFD	MOTORIZED FIRE DAMPER
BDD	BACKDRAFT DAMPER
OBD	OPPOSED BLADE VOLUME CONTROL DAMPER C/W LOCKING QUADRANT
	TURNING VANES
	FLEXIBLE CONNECTION
	ACOUSTIC INSULATION
XXX	TYPE OF EQUIPMENT EQUIPMENT IDENTIFICATION
XX-X / XXX	TYPE OF DIFFUSER OR GRILLE GRILLE SIZE OR DIFFUSER NECK SIZE AIRFLOW (CFM OR L/s)
50 / 7.5	STARTER (3 PHASE / PHASE)
S	IN-SUITE ERV PASTER SWITCH
S	FAN SWITCH / IN-SUITE ERV OVERRIDE BUTTON
CO	CO SENSOR
G	GAS LINE
G	GAS METER
G	GAS COCK
PR	PRESSURE REDCING VALVE
	SANITARY ABOVE GRADE
	SANITARY BELOW GRADE
	STORM ABOVE GRADE
	STORM BELOW GRADE
	DOMESTIC COLD WATER
CO	DOMESTIC HOT WATER
	DOMESTIC HOT WATER RECIRCULATION
	SANITARY VENT
	WATER METER
FD	FLOOR DRAIN
FFD	FUNNEL FLOOR DRAIN
HD	HUB DRAIN
RD	ROOF DRAIN
SLD	SLAB DRAIN
AD	AREA DRAIN
BLAD	BI-LEVEL AREA DRAIN
CB	CATCH BASIN
	SANITARY TRAP
	ELBOW UP
	ELBOW DOWN
CO	WALL CLEANOUT
CO	FLOOR CLEANOUT
HB	HOSE BIBB
NFHB	NON-FREEZE HOSE BIBB
	GLOBE VALVE
	GATE VALVE
	BALL VALVE
	BUTTERFLY VALVE
	PRESSURE REDUCING VALVE
	CHECK VALVE
	CAP
	COMPRESSED AIR OUTLET
	BACKFLOW PREVENTER
	CIRCUIT BALANCING VALVE
	MULTIPLE PIPES / - DENOTES NO. OF PIPES
T	TEMPERATURE SENSOR
T	THERMOMETER
	2-WAY MODULATING VALVE
	3-WAY MODULATING VALVE
	1/2"x4"(T) / THERMOWELL C/W 1/2" BUSHING + 1/2" PLUG
XXX	FLOOR ELEVATION (ABOVE LEVEL)
XXX	FLOOR ELEVATION THIS LEVEL
XXX	HEADROOM (FLOOR TO U/S HEIGHT)

PRIORITY	1	ISSUED FOR ---	E.P.
DATE	NO.	DESCRIPTION	BY

MARK VOID ALL PRINTS DATED PREVIOUS TO FINAL DATE ABOVE

REVISIONS

CONTRACTOR MUST CHECK AND VERIFY ALL DIMENSIONS AND CONDITIONS ON THE JOB AND REPORT DISCREPANCIES TO THE ENGINEER BEFORE PROCEEDING WITH WORK. DRAWINGS AND SPECIFICATIONS ARE THE ENGINEERS AND MUST BE RETURNED UPON COMPLETION OF THE WORK.

DRAWINGS ARE NOT TO BE SCALED

NOVA TREND ENGINEERING GROUP LTD.
113 West Beaver Creek Road, Unit 31
Richmond Hill, Ontario L4B 3M1
Tel: 905 882-9445
Fax: 905 882-9441
Email: cad@novatrendeng.com

DRAWING TITLE
14/F
MECHANICAL LAYOUT

PROJECT TITLE
ALEXANDRA PARK
XXX
TORONTO ONTARIO

DRAWN BY:	CHECKED BY:	SCALE:
G.S.	E.P.	1:50
DATE: FEB. 13	PROJECT NUMBER: 1313	DRAWING NUMBER: M-32 OF 99

Drawing name: \\CADSERVER\Current Dwg\1313\1313 - Alexandra Park\2014\1313M- 32(14F PLAN - MECHANICAL LAYOUT).dwg Plotted: Mar 12, 2014 - 3:44pm

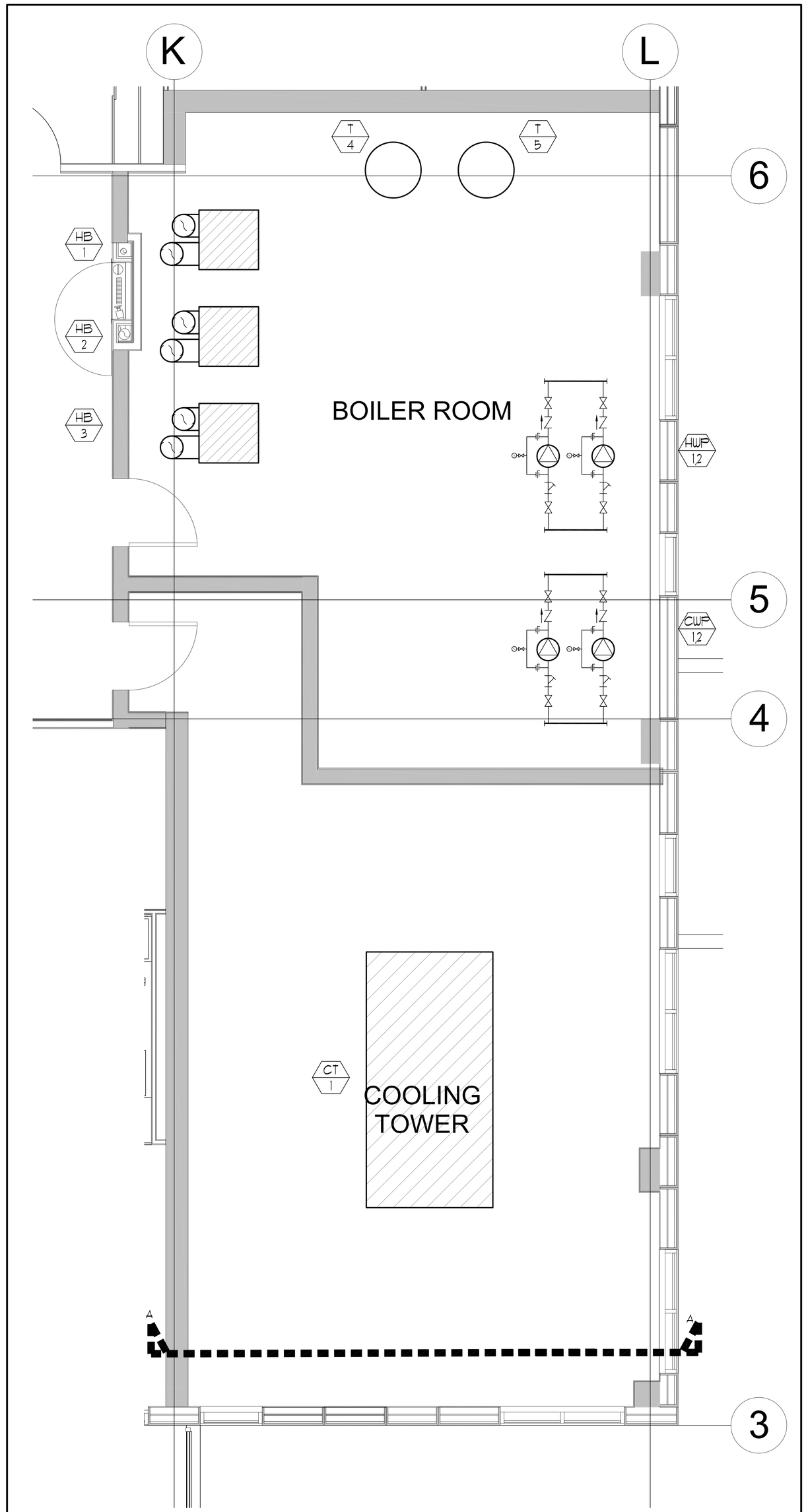

ENLARGED COOLING TOWER & BOILER ROOM P&ID LAYOUT

SCALE 1:25

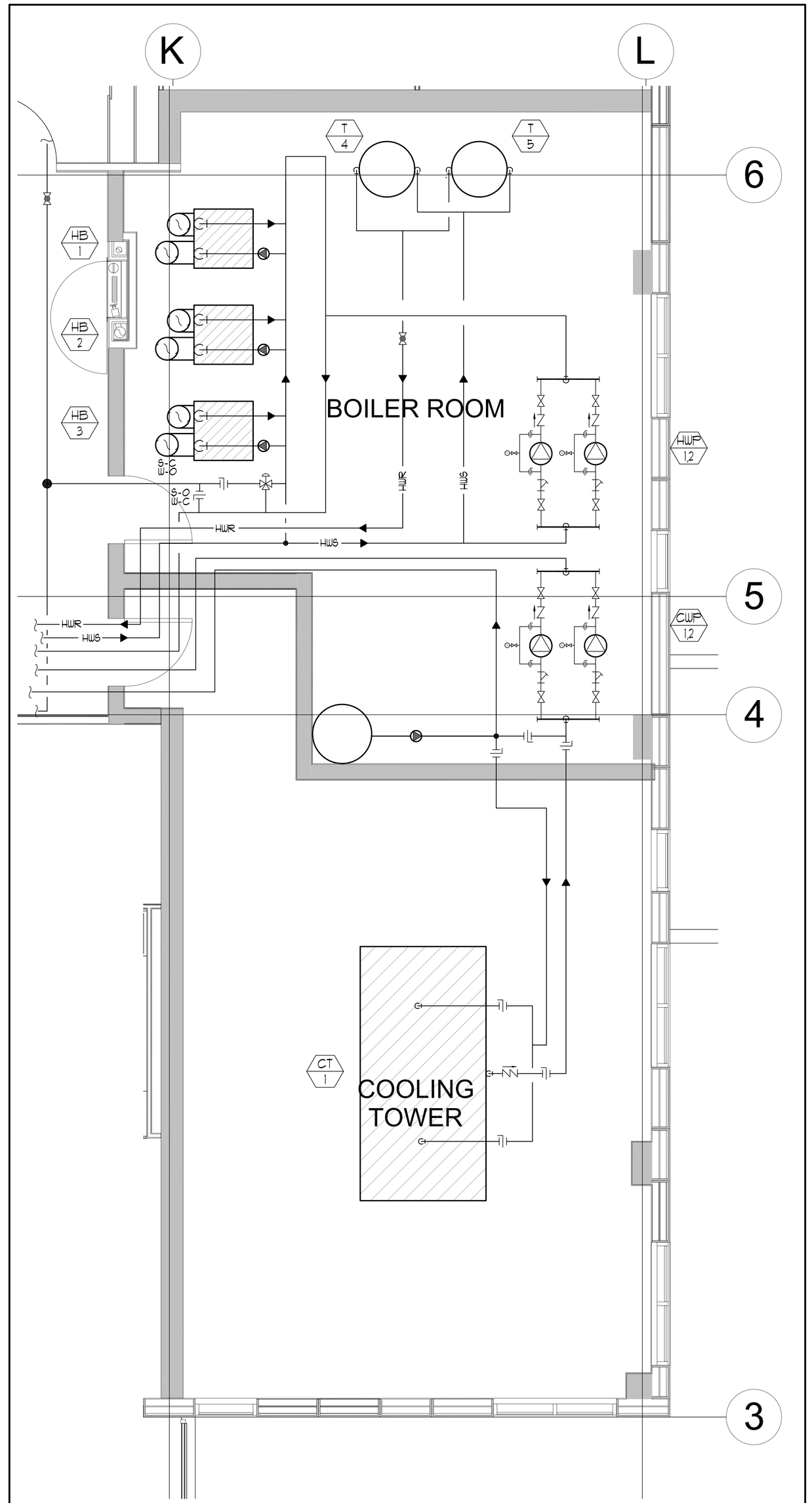

ENLARGED COOLING TOWER & BOILER ROOM HVAC PIPING LAYOUT

SCALE 1:25

GENERAL AND ACOUSTIC NOTES:

1) CONTRACTOR SHALL CO-ORDINATE ARCHITECTURAL, STRUCTURAL, LIGHTING, HVAC AND SPRINKLER DRAWINGS TO AVOID AREAS OF CONFLICT AND TO MAINTAIN CEILING HEIGHTS.

2) CONTRACTOR SHALL REPORT ALL DISCREPANCIES AND AREA OF CONFLICTS TO THE ENGINEER PRIOR TO WORK BEGINS.

3) REFER TO ACOUSTIC ENGINEER'S REPORT FOR ACOUSTIC TREATMENT REQUIRED.

4) FIRE DAMPERS ARE REQUIRED TO BE LISTED AND ARE TO HAVE FIRE-PROTECTION RATING OF THE PENETRATED FIRE SEPARATION.

5) THE PIPING PENETRATING THE VARIOUS FIRE SEPARATION IS REQUIRED TO BE FIRESTOPPED WITH A LISTED FIRESTOPPING MATERIAL IN ACCORDANCE WITH OBC ARTICLE 3-1.9-1.

6) THE FIRE HOSE CABINETS THAT ARE RECESSED INTO THE EXIT STAIR SHAFTS ARE REQUIRED TO BE SEPARATED FROM THE EXIT STAIR BY A 2 HR. FIRE SEPARATION.

7) ALL AHU/FAU/MAU SHALL BE MOUNTED ON DOUBLE LAYER (N&N) PADS BETWEEN UNIT CASING AND HOUSEKEEPING PAD. EXTERNAL HEAT RECOVERY FAN SHALL BE ISOLATED USING SPRING ISOLATORS WITH MINIMUM 38MM STATIC DEFLECTION, PLUS A NEOPRENE-IN-SHEAR ELEMENT IN SERIES. ALL UNIT DUCTWORK WITHIN THE MECHANICAL ROOM SHALL BE C/W 25MM INTERNAL ACOUSTIC LINING, 25MM INSULATION AND JACKETTING. ALL ASSOCIATED DUCTWORK SHALL BE HUNG BY HANGERS WITH NEOPRENE PADS.

8) MAIN FRESH AIR SHAFT TO BE C/W 25MM THICK ACOUSTIC DUCT LINER STARTING FROM THE MECHANICAL PENTHOUSE AND DOWN THREE FLOORS.

9) CHILLER ROOM IS TO BE CONSTRUCTED WITH A MINIMUM 100MM FLOATING CONCRETE FLOOR ON 50 MM THICK ISOLATORS, DESIGNED FOR A FUNDAMENTAL FREQUENCY OF 10 HZ OR LESS, WITH BATT INSULATION IN THE CAVITY.

THE FLOATING FLOOR DESIGN SHALL INCLUDE SEPARATE CONCRETE PIERS WHICH PENETRATE THE FLOATING FLOOR TO SUPPORT THE CHILLER. THE PAD MATERIAL UNDER THE PIER SHALL BE CDM-42 OR EQUIVALENT.

THE CHILLER BODY SHALL BE ISOLATED FROM THE PIERS USING MULTIPLE-COIL SPRING ISOLATORS HAVING A STATIC DEFLECTION OF APPROXIMATELY 2", PLUS A THICK NOISE PAD UNDER THE SPRING BASE. THE NOISE PAD SHALL CONSIST OF MULTIPLE LAYERS OF RUBBER, MAXIMUM 45 DUROMETER, SEPARATED BY STEEL SHIMS AND TOPPED BY A STEEL LOAD PLATE. THE NOISE PAD SHALL BE SIZED TO ACHIEVE A STATIC DEFLECTION OF APPROXIMATELY 0.3" AT A LOAD EQUAL TO 2/3 OF THE MAXIMUM EXPECTED POINT LOAD OF THE CHILLER.

CHILLER SHALL BE COMPLETE WITH ACOUSTIC BLANKET.

10) ALL CONNECTIONS BETWEEN THE CHILLER AND THE ATTACHED PIPING SHALL INCLUDE TWIN-SPHERE RUBBER EXPANSION JOINTS.

11) COOLING TOWER SHALL BE ISOLATED USING DISCRETE SPRING ISOLATORS, WITH MINIMUM 75MM STATIC DEFLECTION AND DOUBLE-LAYER PADS UNDER THE SPRING BASE. TWIN-SPHERE RUBBER EXPANSION JOINTS THAT ARE RATED FOR OUTDOOR USE, SHALL BE PROVIDED BETWEEN THE COOLING TOWER AND ATTACHED PIPING.

12) BOILERS AND HEAT EXCHANGERS SHALL BE SUPPORTED ON DOUBLE-LAYER NEOPRENE-STEEL-NEOPRENE RUBBER PADS BETWEEN THE SUPPORT CHANNELS AND THE HOUSEKEEPING PADS BELOW.

13) CWP, SWP, CHWP AND HWP SHALL BE DECOUPLED FROM THE ATTACHED PIPING USING TWIN-SPHERE RUBBER EXPANSION JOINTS ON BOTH THE SUCTION AND DISCHARGE SIDES. FOR VIL PUMPS, THESE EXPANSION JOINTS ARE TYPICALLY LOCATED IN THE VERTICAL SECTION ABOVE THE SUCTION STRAINER AND SHUT-OFF VALVE. THE PUMPS AND DIRECTLY ATTACHED PIPING (UP TO THE TWIN-SPHERE JOINT) SHALL BE MOUNTED ON CONCRETE INERTIA BASES, AND ISOLATED FROM THE FLOATING FLOOR BELOW USING SPRING ISOLATORS WITH MINIMUM 38 MM STATIC DEFLECTION AND 25 MM THICK N&N PADS UNDER THE SPRING BASE, PROPERLY LOADED.

14) ALL BASE MOUNTED PUMPS SHALL BE MOUNTED C/W CONCRETE INERTIA BASES SUPPORTED ON STEEL SPRINGS WITH A STATIC DEFLECTION OF AT LEAST 15" AND INCLUDING AT LEAST TWO LAYERS OF WAFFLED NEOPRENE PADS BELOW.

15) SMALLER PUMPS MAY BE SUPPORTED USING PIPE STANDS UNDER THE ELBOWS (NOT DIRECTLY FROM THE CASING ITSELF), WITH 38MM DEFLECTION SPRING ISOLATORS PLUS NEOPRENE. SMALL PUMPS SHALL BE ISOLATED USING NEOPRENE-IN-SHEAR ISOLATORS FOR THE FIRST 3 POINTS OF SUPPORT ON EITHER SIDE OF THE PUMP.

16) ALL VFD'S TO BE MOUNTED ON RUBBER PADS.

17) IN-LINE AND CABINET FANS SHALL BE ISOLATED WITH SPRINGS OR NEOPRENE-IN-SHEAR MOUNTS. SIDEWALL FANS SHALL BE ISOLATED USING NEOPRENE MOUNTS, PADS OR GROMMETS.

NOTES:

1
2
3
4

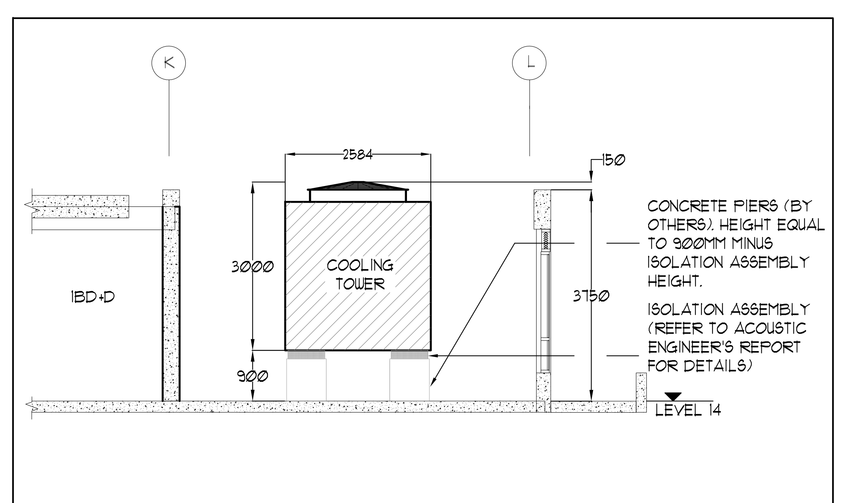

SECTION A-A

N.T.S.

LEGEND MECHANICAL

SYMBOL	DESCRIPTION
	SUPPLY AIR DIFFUSER
	SUPPLY AIR TROFFER
	LINEAR SUPPLY DIFFUSER
T	THERMOSTAT
S	FAN SWITCH
	RETURN AIR GRILLE
	EXHAUST AIR GRILLE
	SUPPLY DUCT UP
	SUPPLY DUCT DOWN
	RETURN DUCT UP
	RETURN DUCT DOWN
	EXHAUST DUCT UP
	EXHAUST DUCT DOWN
FD	FIRE DAMPER
BD	BALANCING DAMPER
MD	MOTORIZED DAMPER
MFD	MOTORIZED FIRE DAMPER
BDD	BACKDRAFT DAMPER
OBD	OPPOSED BLADE VOLUME CONTROL DAMPER C/W LOCKING QUADRANT
	TURNING VANES
	FLEXIBLE CONNECTION
	ACOUSTIC INSULATION
	TYPE OF EQUIPMENT / EQUIPMENT IDENTIFICATION
	TYPE OF DIFFUSER OR GRILLE / GRILLE SIZE OR DIFFUSER NECK SIZE / AIRFLOW (CFM OR L/S)
	STARTER (3 PHASE , 1 PHASE)
S	N-SUITE ERV MASTER SWITCH
S	FAN SWITCH / N-SUITE ERV OVERRIDE BUTTON
CO	CO SENSOR
G	GAS LINE
G	GAS METER
G	GAS COCK
PR	PRESSURE REDUCING VALVE
	SANITARY ABOVE GRADE
	SANITARY BELOW GRADE
	STORM ABOVE GRADE
	STORM BELOW GRADE
	DOMESTIC COLD WATER
	DOMESTIC HOT WATER
	DOMESTIC HOT WATER RECIRCULATION
V	SANITARY VENT
WM	WATER METER
FD	FLOOR DRAIN
FFD	FUNNEL FLOOR DRAIN
HD	HUB DRAIN
RD	ROOF DRAIN
BLD	BLAB DRAIN
AD	AREA DRAIN
BLAD	BI-LEVEL AREA DRAIN
CB	CATCH BASIN
	SANITARY TRAP
	ELBOW UP
	ELBOW DOWN
CO	WALL CLEANOUT
CO	FLOOR CLEANOUT
HB	HOSE BIBB
NFHB	NON-FREEZE HOSE BIBB
	GLOBE VALVE
	GATE VALVE
	BALL VALVE
	BUTTERFLY VALVE
	PRESSURE REDUCING VALVE
	CHECK VALVE
	CAP
	COMPRESSED AIR OUTLET
N	BACKFLOW PREVENTER
	CIRCUIT BALANCING VALVE
	MULTIPLE PIPES / - DENOTES NO. OF PIPES
T	TEMPERATURE SENSOR
T	THERMOSTAT
	2-WAY MODULATING VALVE
	3-WAY MODULATING VALVE
T	1/2"x4"(1) THERMOWELL C/W 1/2" BUSHING x 1/2" PLUG
	FLOOR ELEVATION ABOVE LEVEL
	FLOOR ELEVATION THIS LEVEL
	HEADROOM (FLOOR TO U/S HEIGHT)

REVISIONS			
YYMMDD		ISSUED FOR:	
DATE	NO.	DESCRIPTION	BY

MARK VOID ALL PRINTS DATED PREVIOUS TO FINAL DATE ABOVE

REVISIONS

CONTRACTOR MUST CHECK AND VERIFY ALL DIMENSIONS AND CONDITIONS ON THE JOB AND REPORT DISCREPANCIES TO THE ENGINEER BEFORE PROCEEDING WITH THE WORK. THIS DRAWING IS THE PROPERTY OF THE ENGINEERS AND MUST BE RETURNED UPON COMPLETION OF THE WORK.

DRAWINGS ARE NOT TO BE SCALED

NOVA TREND ENGINEERING GROUP LTD.

178 West Beaver Creek Road, Unit 31
Richmond Hill, Ontario L4B 3M1
Tel: 905 882-5445
Fax: 905 882-5447
Email: cad@novatrendeng.com

DRAWING TITLE:
ROOF
MECHANICAL LAYOUT

PROJECT TITLE:
ALEXANDRA PARK

XXX
TORONTO ONTARIO

DRAWN BY:	CHECKED BY:	SCALE:
G.S.	E.P.	1:25

DATE:	PROJECT NUMBER:	DRAWING NUMBER:
FEB. 13	1313	M-33 OF 39

Drawing name: \\CADSERVER\Current Dwg\1313\1313M - 33\ROOF PLAN - MECHANICAL LAYOUT.dwg Plotted: Mar 12, 2014 - 3:45pm

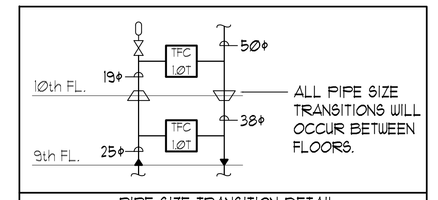

PIPE SIZE TRANSITION DETAIL
N.T.S.

THIS DRAWING IS TO BE READ IN CONJUNCTION WITH SCHEMATICS DRAWINGS.

ACOUSTIC NOTES:

1) ALL RISER ANCHORS MUST INCLUDE 25MM THICK N&N ISOLATION PADS. THE PADS ARE TO BE HELD IN PLACE WITH HORIZONTAL STEEL PLATES WELDED TO BRACKETS THAT ARE IN TURN WELDED TO THE RISER.

2) WHERE RISERS ARE SUPPORTED BY T-CLAMPS RATHER THAN ANCHORS, N&N PADS ARE TO BE INCLUDED BELOW THE T-CLAMP.

3) ANY PIPE GUIDES USED IN CONNECTION WITH EXPANSION JOINTS OR LOOPS ARE TO BE THE PRE-FABRICATED TYPE WITH INTEGRAL RUBBER ISOLATION.

NOTES:

1. 19φ CHWS & 19φ HWS
2. 25φ CHWS & 19φ HWS
3. 25φ CHWS & 25φ HWS
4. 19φ CHWR & 19φ HWR

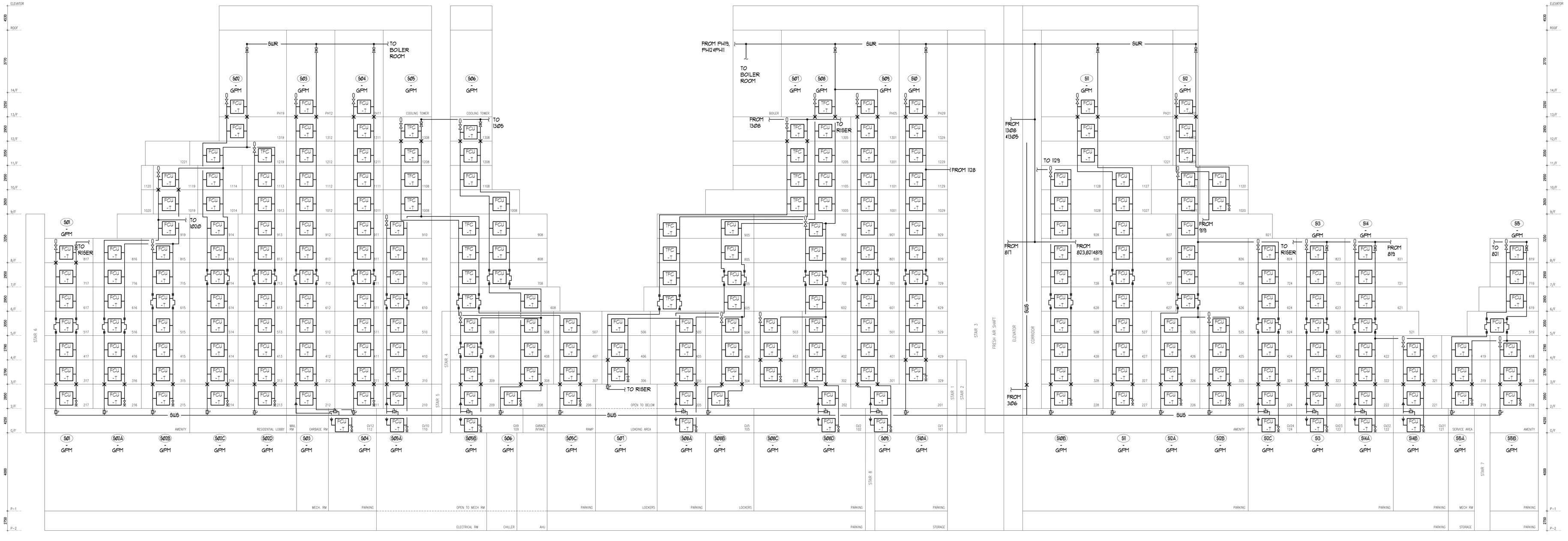

REV/CITY		ISSUED FOR ---	E.P.
DATE	NO.	DESCRIPTION	BY

MARK VOID ALL PRINTS DATED PREVIOUS TO FINAL DATE ABOVE

REVISIONS

CONTRACTOR MUST CHECK AND VERIFY ALL DIMENSIONS AND CONDITIONS ON THE JOB AND REPORT DISCREPANCIES TO THE ENGINEERS BEFORE PROCEEDING WITH THE WORK. THIS DRAWING IS THE PROPERTY OF THE ENGINEERS AND MUST BE RETURNED UPON COMPLETION OF THE WORK.

DRAWINGS ARE NOT TO BE SCALED

NOVA TREND ENGINEERING S.E.N.C. LTD.
119 West Beaver Creek Road, Unit 31
Richmond Hill, Ontario L4B 3M1
Tel: 905 882-5445
Fax: 905 882-5447
Email: cad@novatrending.com

DRAWING TITLE:
SYSTEM WATER RISER DIAGRAM

PROJECT TITLE:
ALEXANDRA PARK

XXX
TORONTO ONTARIO

DRAWN BY:	CHECKED BY:	SCALE:
G.S.	E.P.	N.T.S.
DATE:	PROJECT NUMBER:	DRAWING NUMBER:
FEB. 13	1313	M-34 OF 39

Drawing name: \\CADSERVER\Current Dwgs\1313\1313-M - Alexandra Park\DWG\1313M-34SYSTEM WATER RISER DIAGRAM.dwg Plotted: Mar 12, 2014 - 3:45pm

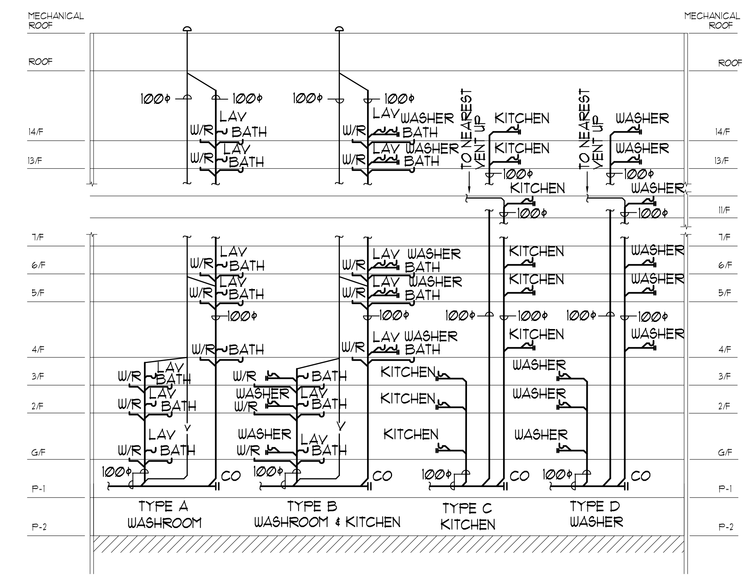

GENERAL SANITARY RISER NOTES:

1. ALL INSTALLATION SHALL BE ACCORDING TO LATEST EDITION OF THE PLUMBING CODE.
2. PROVIDE YOKE VENT AT EVERY FIVE STOREYS OR AS REQUIRED BY CODE.
3. PROVIDE MINIMUM 3000mm SEPARATION BETWEEN CONNECTION OF MAIN SANITARY AND AUXILIARY SANITARY RISERS TO THE SANITARY BRANCH AT THE BASE OR THE RISERS.

TYPICAL SANITARY RISER DIAGRAM — N.T.S.

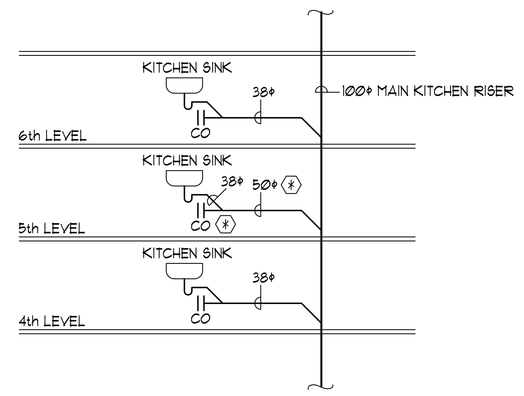

NOTES:

④ INSTALL 50Ø+ CLEANOUT FOR KITCHEN RISER EVERY 5 FLOORS.

KITCHEN RISER CLEANOUT DETAIL — N.T.S.

FRV SCHEDULE					
FRV #	DUTY	FLOW RATE (GPM)	INLET PRESSURE (PSI)	OUTLET PRESSURE (PSI)	REMARKS
1	LOW ZONE DHW	-	-	-	CLA-VAL MODEL 90G-01A5KG -mm+ OR EQUAL.
2	LOW ZONE DCW	-	-	-	CLA-VAL MODEL 90G-01A5KG -mm+ OR EQUAL.
3	HIGH ZONE DHW	-	-	-	CLA-VAL MODEL 90G-01A5KG -mm+ OR EQUAL.
4	HIGH ZONE DCW	-	-	-	CLA-VAL MODEL 90G-01A5KG -mm+ OR EQUAL.

GENERAL NOTES:

1) SIZES SHOWN INDICATE REDUCTIONS AFTER DH4CW HEADERS ON STOREY INDICATED.
2) REFER TO FLOOR PLANS FOR SIZING OF HORIZONTAL PIPE.
3) PROVIDE 19+ SHUT OFF VALVES FOR EACH SUITE.
4) PROVIDE DRAIN VALVE AT BOTTOM OF EACH RISER.
5) PROVIDE AIR VENT AT TOP OF EACH RISER.
6) PROVIDE 19+ CIRCUIT BALANCING VALVE ON TOP OF EACH DOMESTIC HOT WATER RISER EACH CIRCUIT VALVE TO BE BALANCED TO EQUAL FLOW.
7) ALL RISER ANCHORS MUST INCLUDE 25MM THICK NSN ISOLATION PADS. THE PADS ARE TO BE HELD IN PLACE WITH HORIZONTAL STEEL PLATES WELDED TO BRACKETS THAT ARE IN TURN WELDED TO THE RISER.
8) WHERE RISERS ARE SUPPORTED BY T-CLAMPS RATHER THAN ANCHORS, NSN PADS ARE TO BE INCLUDED BELOW THE T-CLAMP.
9) ANY PIPE GUIDES USED IN CONNECTION WITH EXPANSION JOINTS OR LOOPS ARE TO BE THE PRE-FABRICATED TYPE WITH INTEGRAL RUBBER ISOLATION.

NOTES:

1. WATER METER ASSEMBLY c/w BACK WATER VALVE AND EXPANSION TANK PER CITY'S STANDARDS. SEE DETAILS ON DWG M-27.
2. 19+ CIRCUIT BALANCING VALVE AT TOP OF EACH DHW RISER UNLESS OTHERWISE SPECIFIED (TYPICAL)
3. --
4. 19+ SHUT-OFF VALVE FOR EACH SUITE. (TYPICAL)
5. SET AT 120°F DHW & COMBINED DCW & DHWR TO MAINTAIN MAXIMUM SUPPLY TEMPERATURE AT 120°F.
6. BYPASS HUB ONCE DHW SUPPLY TEMPERATURE REACHES 140°F.
7. 19+ DCW & 19+ DHW.
8. 25+ DCW & 19+ DHW.
9. 32+ DCW & 25+ DHW.
10. 38+ DCW & 32+ DHW.
11. 50+ DCW & 38+ DHW.
12. THERMOMETER AND PRESSURE GAUGE.

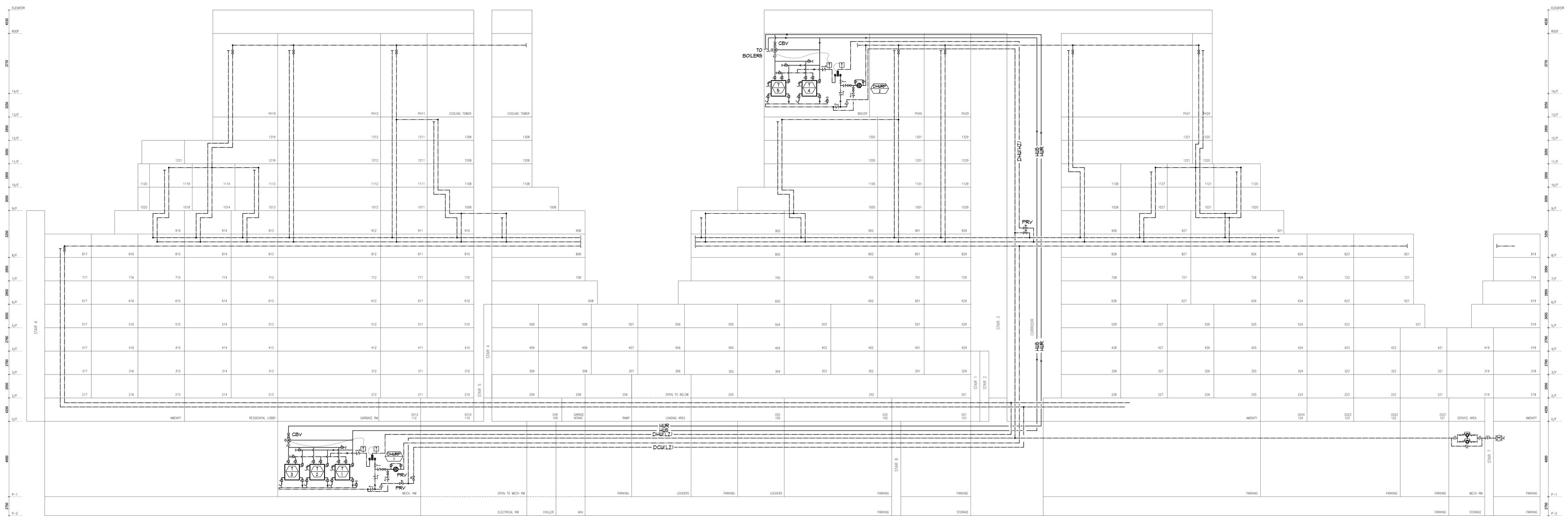

REV/DFT/T	1	ISSUED FOR ---	E.P.
DATE	NO.	DESCRIPTION	BY

PLANS VOID ALL PRINTS DATED PREVIOUS TO FINAL DATE ABOVE

REVISIONS

CONTRACTOR MUST CHECK AND VERIFY ALL DIMENSIONS AND CONDITIONS ON THE JOB AND REPORT ANY ERRORS AND OMISSIONS TO THE ENGINEER BEFORE PROCEEDING WITH THE WORK. THIS DRAWING IS THE PROPERTY OF THE ENGINEER AND MUST BE RETURNED UPON COMPLETION OF THE WORK.

DRAWINGS ARE NOT TO BE SCALED

NOVA TREND DEVELOPMENTS

139 West Beaver Creek Road, Unit 31
Richmond Hill, Ontario L4B 3M1
Tel: 905 882-9445
Fax: 905 882-9447
Email: cad@novatrendeng.com

DRAWING TITLE
DCW, DHW & DHWR
RISER DIAGRAM

PROJECT TITLE
ALEXANDRA PARK

XXX
TORONTO ONTARIO

DRAWN BY:	CHECKED BY:	SCALE:
G.S.	E.P.	N.T.S.
DATE:	PROJECT NUMBER:	DRAWING NUMBER:
FEB, 13	1313	M-35 OF 39

Drawing name: \\CADSERVER\Current Dwg's\1313 - Alexandra Park\2013\1313M- 3500M, DHW, DHWR RISER DIAGRAM.dwg Plotted: Mar 12, 2014 - 3:45pm

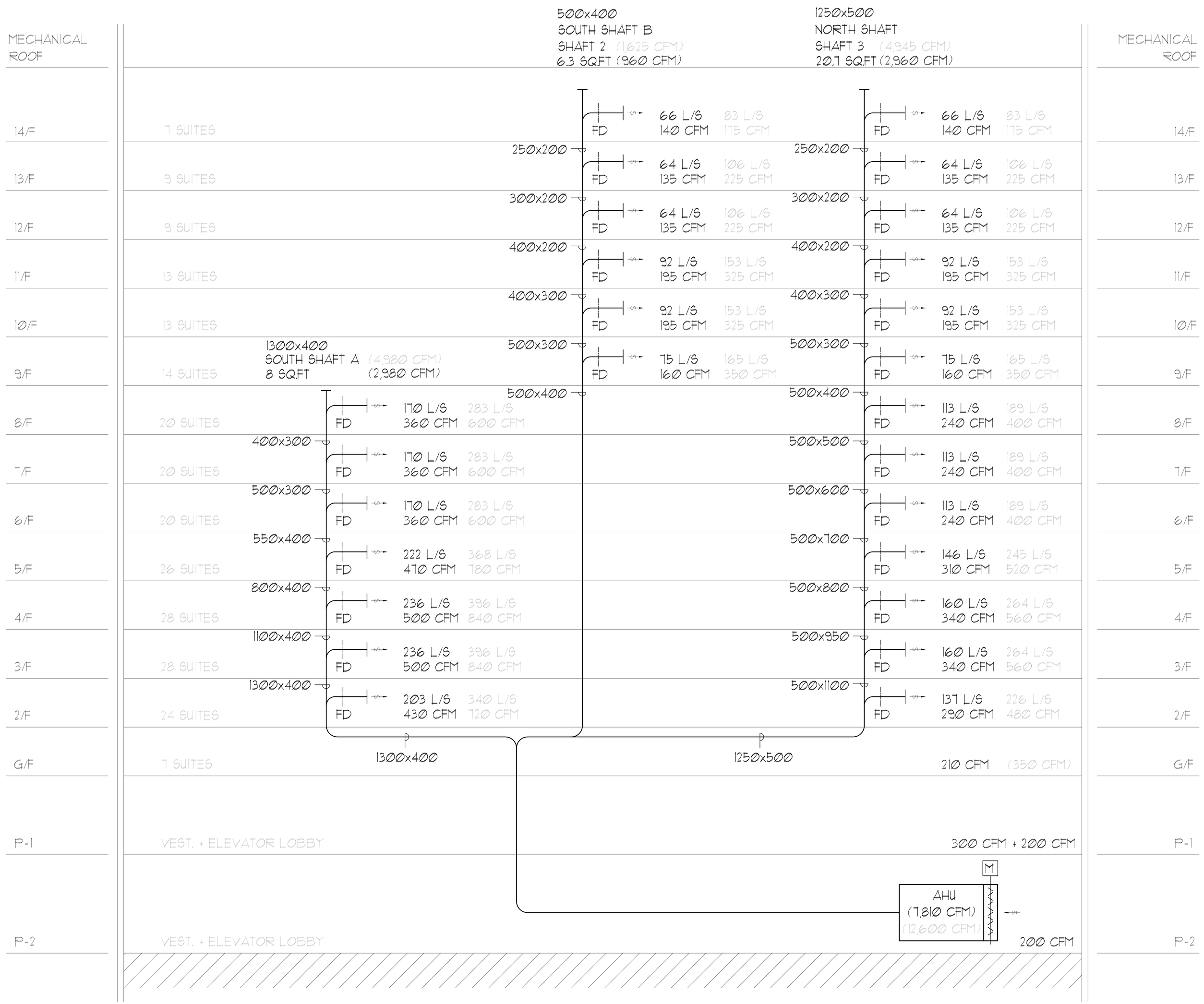

PROD/TY	1	ISSUED FOR ---	E.P.
DATE	NO	DESCRIPTION	BY

MARK VOID ALL PRINTS DATED PREVIOUS TO FINAL DATE ABOVE

REVISIONS

CONTRACTOR MUST CHECK AND VERIFY ALL DIMENSIONS AND CONDITIONS ON THE JOB AND REPORT DISCREPANCIES TO THE ENGINEERS BEFORE PROCEEDING WITH THE WORK. THIS DRAWING IS THE PROPERTY OF THE ENGINEERS AND MUST BE RETURNED UPON COMPLETION OF THE WORK.

DRAWINGS ARE NOT TO BE SCALED

NOVA TREND ENGINEERING S.E.N.C. L.L.P.

175 West Beaver Creek Road, Unit 31
Richmond Hill, Ontario L4B 3M1
Tel: 905 882-5445
Fax: 905 882-5447
Email: cad@novatrendeng.com

DRAWING TITLE:
PRESSURIZATION/VENTILATION RISER DIAGRAM

PROJECT TITLE:
ALEXANDRA PARK

XXX
TORONTO ONTARIO

DRAWN BY:	CHECKED BY:	SCALE:
G.S.	E.P.	N.T.S.
DATE: FEB. 13	PROJECT NUMBER: 1313	DRAWING NUMBER: M-36 OF 39

Drawing name: \\CADSERVER\Current Dwg\1313 - Alexandra Park\2013\1313M - 36(PRESSURIZATION & VENTILATION RISER DIAGRAM).dwg Plotted: Mar 12, 2014 - 3:45pm

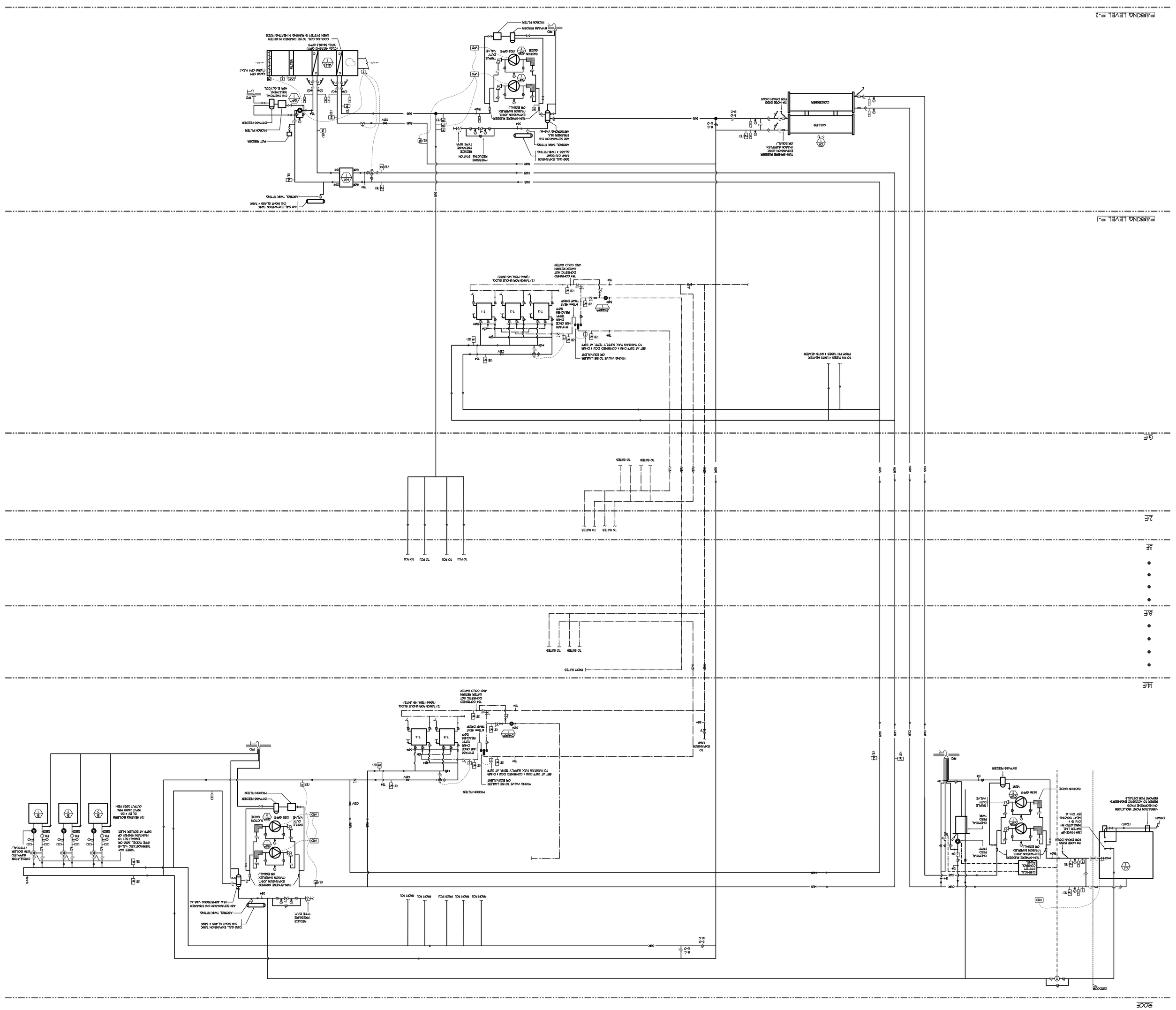

REVISIONS			
DATE	NO.	DESCRIPTION	BY

MAKE NO ALL WRITE DATED PREVIOUS TO THIS DATE

COPYRIGHT NOT DOES ANY ALL DRAWING AND CONTROL OF THE JOB AND REPORT CONSTRUCTION TO THE INVESTING ENGINE PROVIDING THE LOGO THIS DRAWING IS THE PROPERTY OF THE INVESTING ENGINE AND MUST BE RETURNED UPON COMPLETION OF THE WORK

DRAWINGS ARE NOT TO BE SCALED

NOVA INVESTING ENGINE

175 Idell Blair Creek Rd.(Unit 3)
Kitchener Hill, Ontario L4B 3H1
Tel: 905 882-9446
Fax: 905 882-9447
Email: cad@novaengineering.com

DRAWING TITLE

SCHEMATICS

PROJECT TITLE

ALEXANDRA PARK

XXX
TORONTO ONTARIO

DRAWN BY	CHECKED BY	SCALE
G.S.	E.P.	NTS.

DATE	PROJECT NUMBER	DRAWING NUMBER
FEB. 13	13B	M-31

of 35

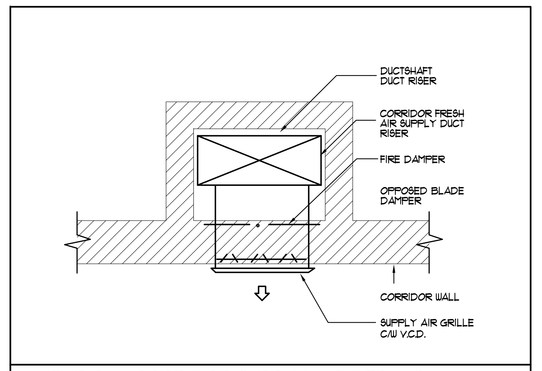

TYPICAL CORRIDOR SUPPLY AIR DETAILS
N.T.S.

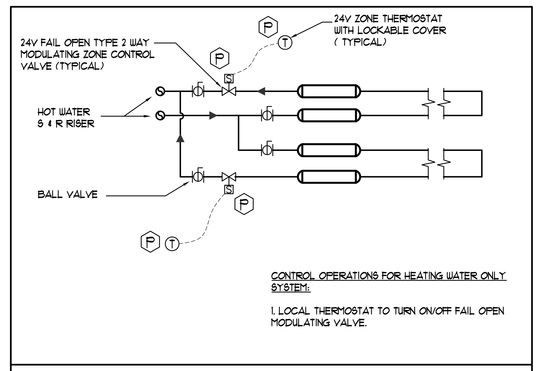

FIN TUBE HEATING CONTROL DETAIL (HTG. WATER ONLY)
N.T.S.

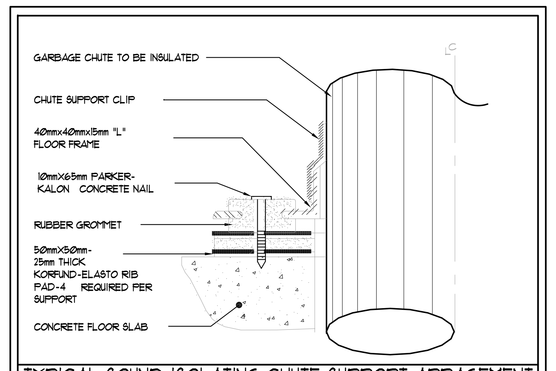

TYPICAL SOUND ISOLATING CHUTE SUPPORT ARRAGEMENT
N.T.S.

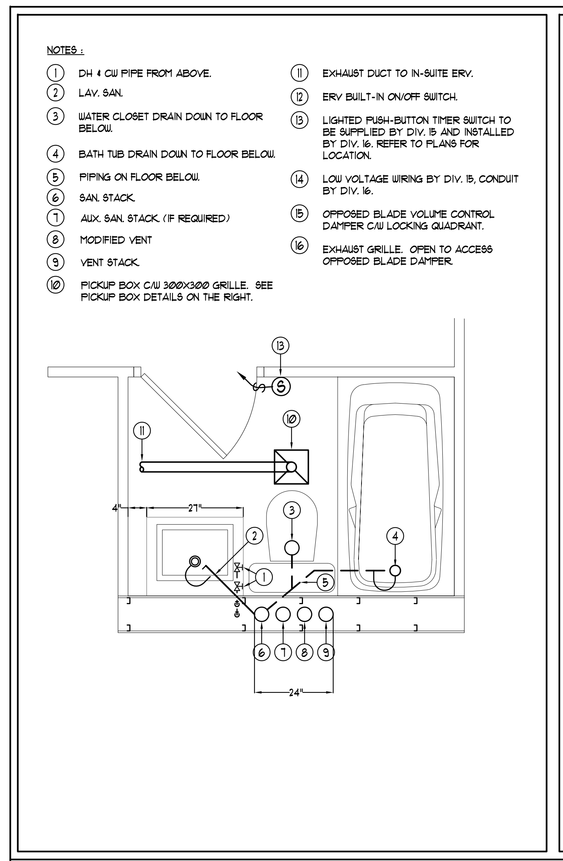

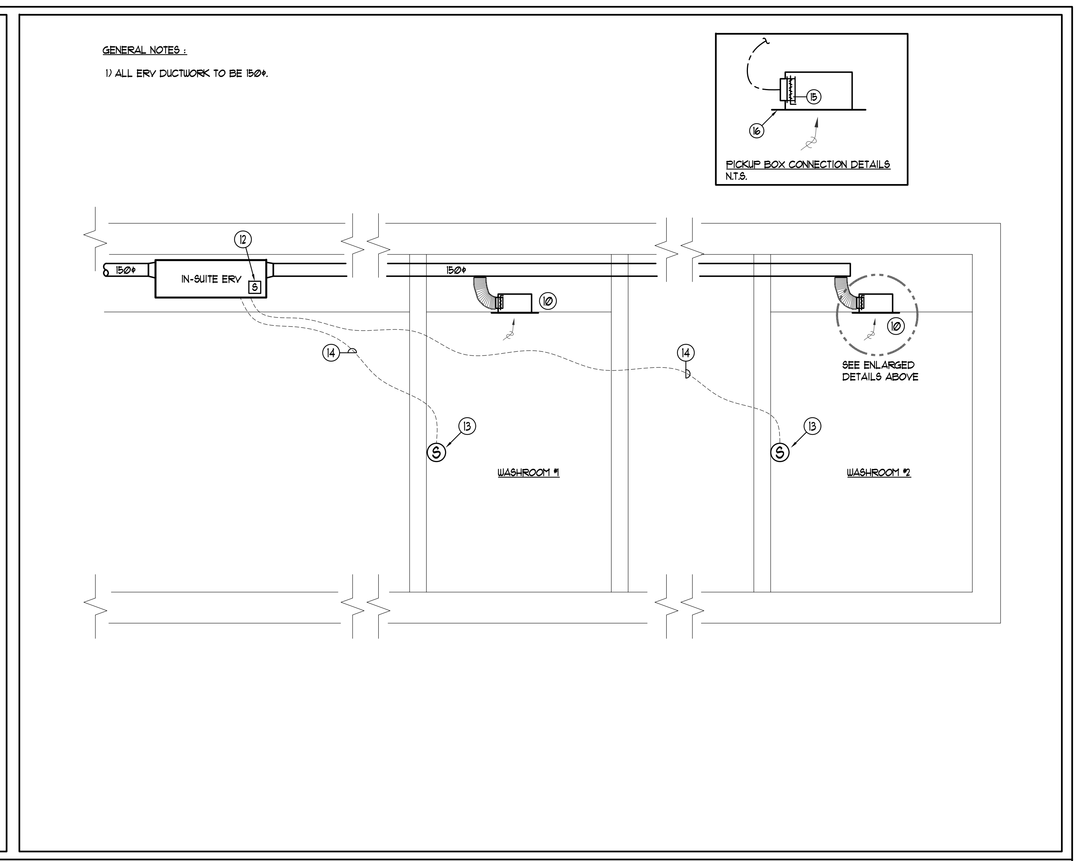

WASHROOM EXHAUST DETAIL
N.T.S.

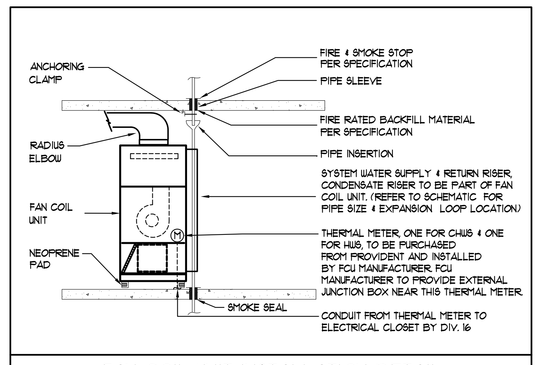

FAN COIL UNIT INSTALLATION DETAIL
N.T.S.

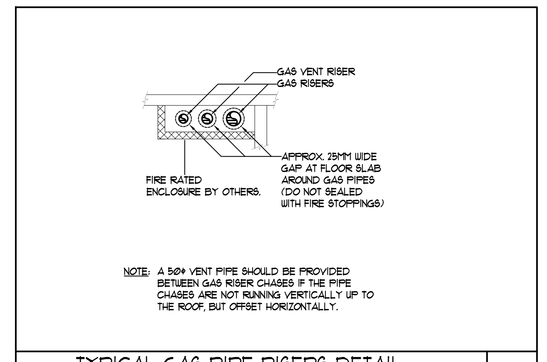

TYPICAL GAS PIPE RISERS DETAIL
IF ENCLOSED BY FIRE RATED ENCLOSURE
NTS

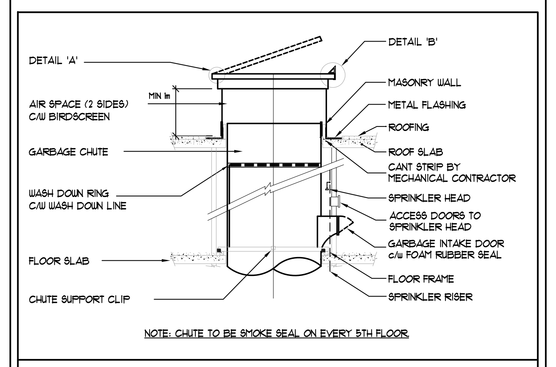

GARBAGE CHUTE DETAIL
N.T.S.

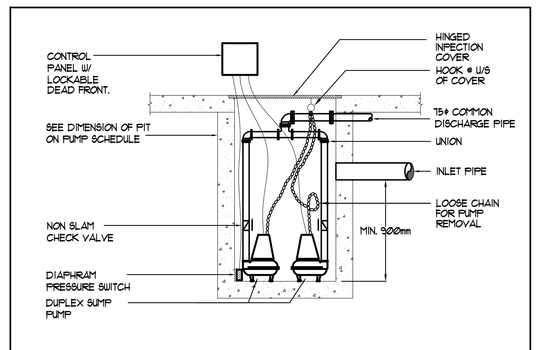

ELEVATOR SUMP PIT DETAIL
N.T.S.

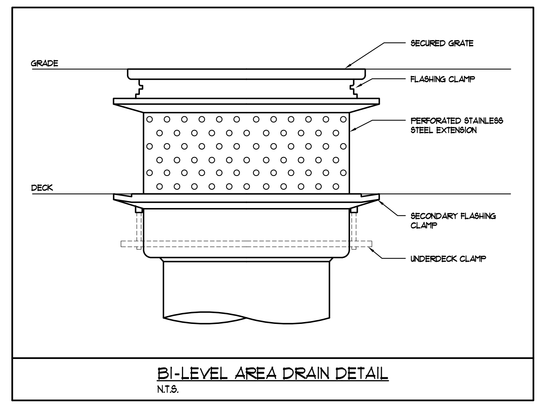

BI-LEVEL AREA DRAIN DETAIL
N.T.S.

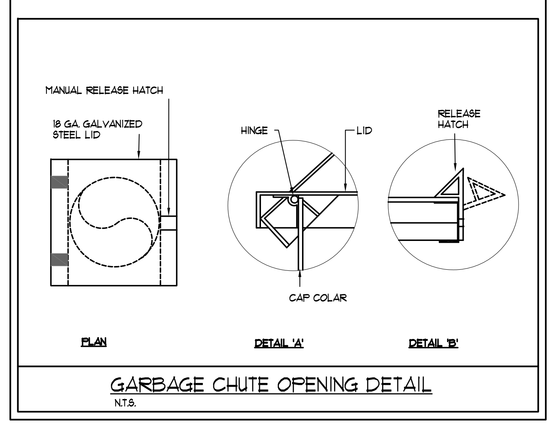

GARBAGE CHUTE OPENING DETAIL
N.T.S.

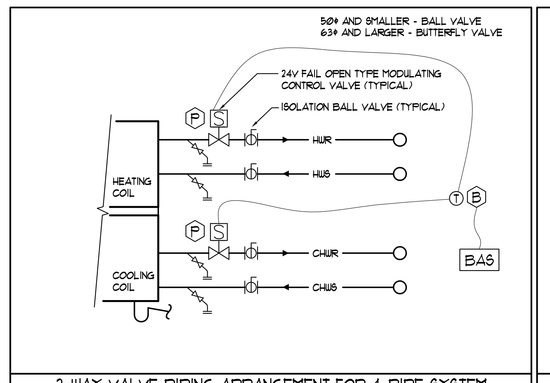

2-WAY VALVE PIPING ARRANGEMENT FOR 4-PIPE SYSTEM (SEPARATE COOLING/HEATING COILS)
N.T.S.

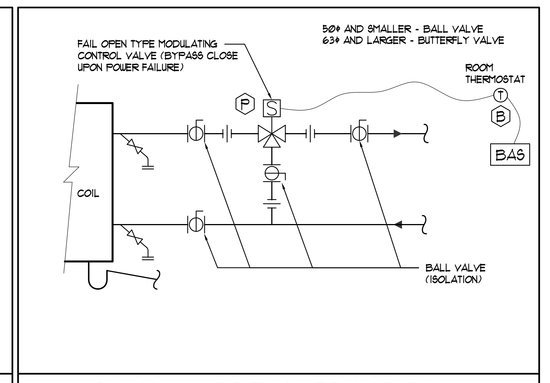

3-WAY VALVE PIPING ARRANGEMENT
N.T.S.

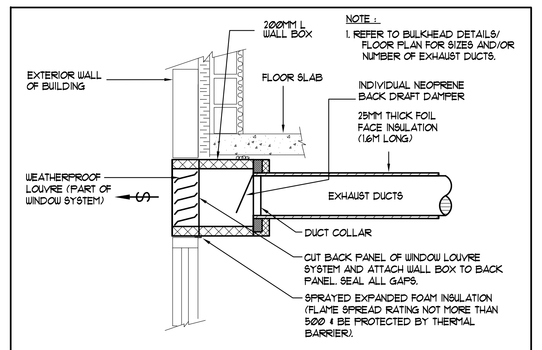

WALL BOX DETAIL
N.T.S.

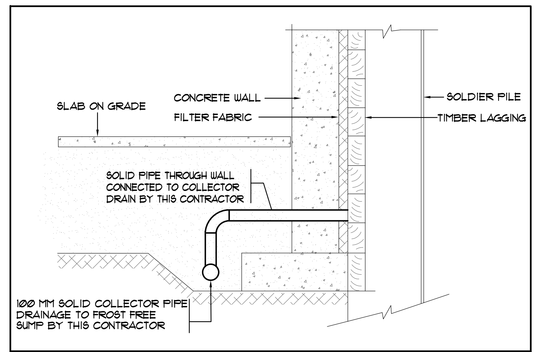

WEEPING TILE INSTALLATION DETAILS
N.T.S.

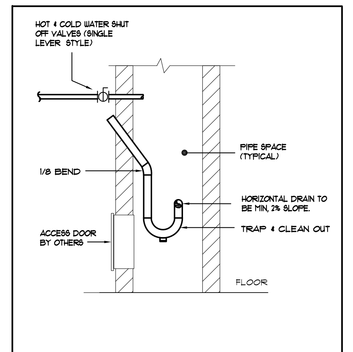

WASHER CONNECTION DETAIL
N.T.S.

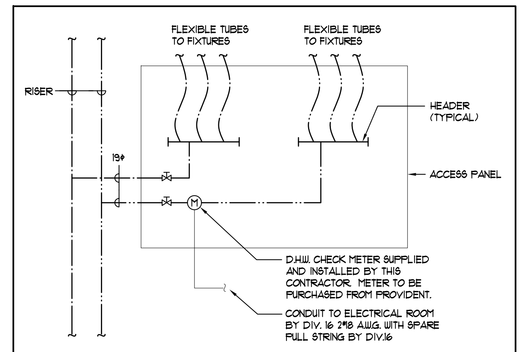

IN-SUITE D.H. 4 C.W. ARRANGEMENT BEHIND KITCHEN CABINET
N.T.S.

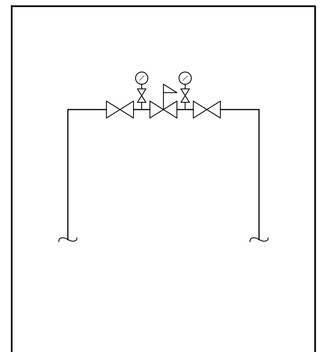

DOMESTIC PRV CONNECTION DETAILS
N.T.S.

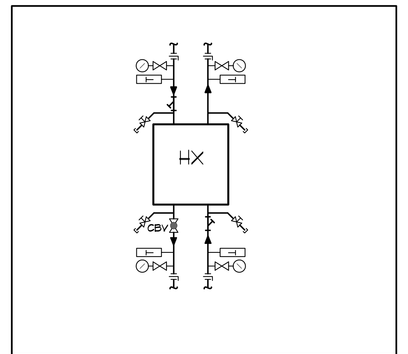

HEAT EXCHANGER
N.T.S.

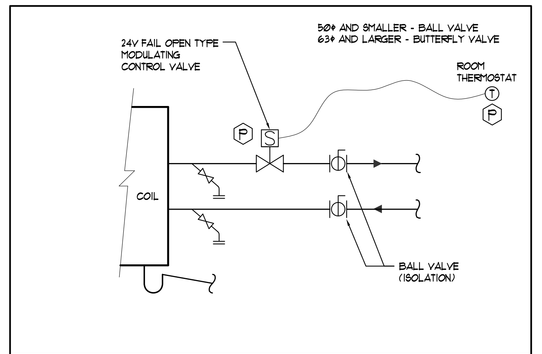

2-WAY VALVE PIPING ARRANGEMENTFOR 2-PIPE SYSTEM
N.T.S.

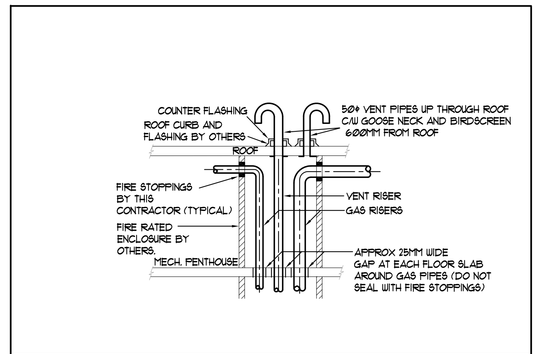

TYPICAL SECTION VIEW OF GAS PIPE RISERS
IF ENCLOSED BY FIRE RATED ENCLOSURE
NTS

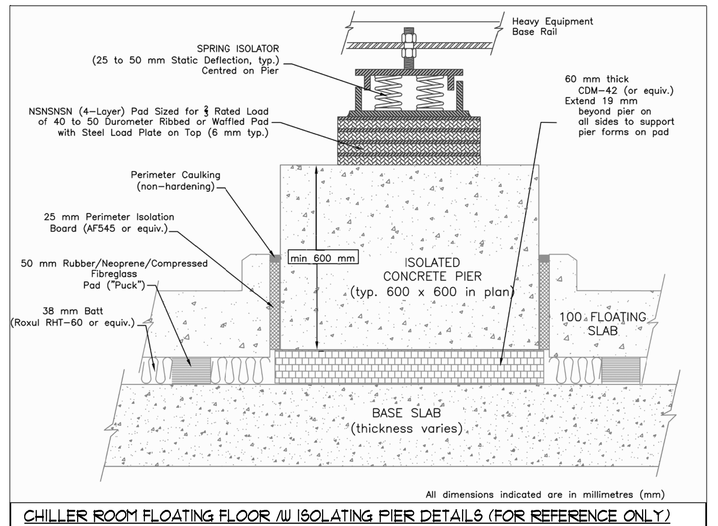

CHILLER ROOM FLOATING FLOOR /W ISOLATING PIER DETAILS (FOR REFERENCE ONLY)
N.T.S.

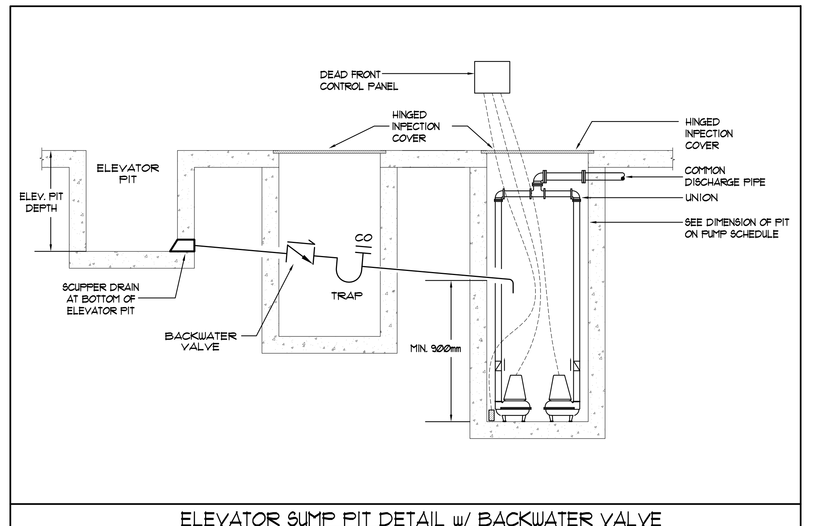

ELEVATOR SUMP PIT DETAIL w/ BACKWATER VALVE
N.T.S.

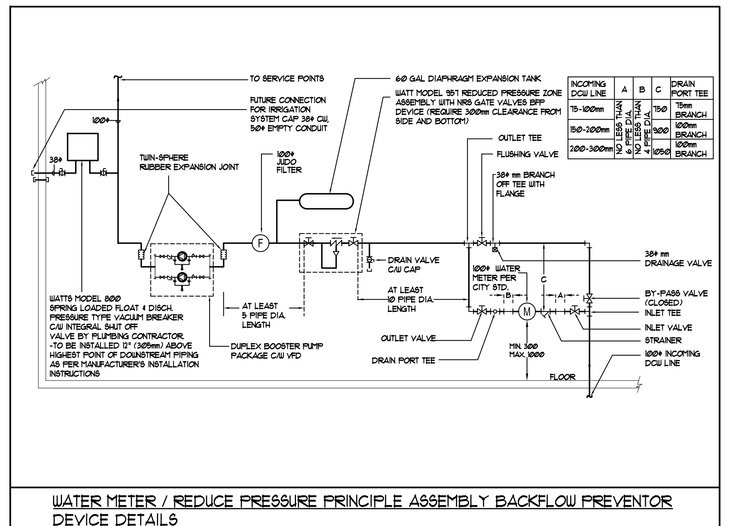

WATER METER / REDUCE PRESSURE PRINCIPLE ASSEMBLY BACKFLOW PREVENTOR DEVICE DETAILS
N.T.S.

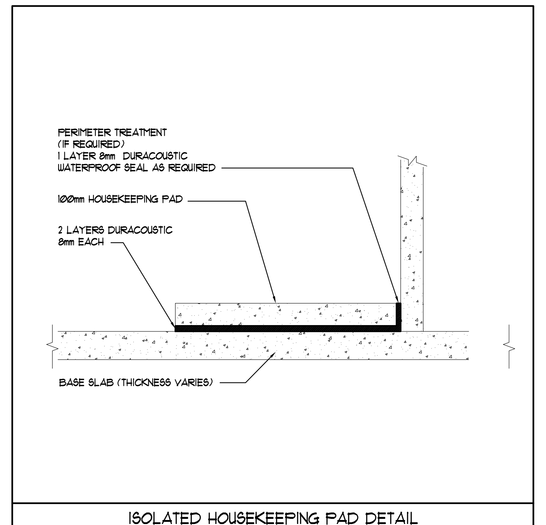

ISOLATED HOUSEKEEPING PAD DETAIL
N.T.S.

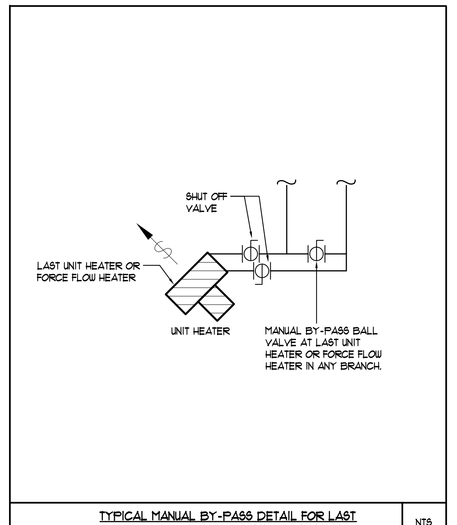

TYPICAL MANUAL BY-PASS DETAIL FOR LAST UNIT OR FORCE FLOW HEATER IN SYSTEM
NTS

PRIORITY	1	ISSUED FOR ---	E.P.
DATE	NO.	DESCRIPTION	BY

MARK VOID ALL PRINTS DATED PREVIOUS TO FINAL DATE ABOVE

REVISIONS

CONTRACTOR MUST CHECK AND VERIFY ALL DIMENSIONS AND CONDITIONS ON THE JOB AND REPORT DISCREPANCIES TO THE ENGINEERS BEFORE PROCEEDING WITH THE WORK. THIS DRAWING IS THE PROPERTY OF THE ENGINEERS AND MUST BE RETURNED UPON COMPLETION OF THE WORK.

DRAWINGS ARE NOT TO BE SCALED

NOVA TREND ENGINEERING
178 West Beaver Creek Road, Unit 31
Richmond Hill, Ontario L4B 3M1
Tel: 905 882-5445
Fax: 905 882-5447
Email: cad@novatrending.com

DRAWING TITLE
DETAILS #1

PROJECT TITLE
ALEXANDRA PARK
XXX
TORONTO ONTARIO

DRAWN BY:	CHECKED BY:	SCALE:
G.S.	E.P.	N.T.S.
DATE:	PROJECT NUMBER:	DRAWING NUMBER:
FEB. 13	1313	M-38 OF 39

Drawing name: \\CADSERVER\Current Dwgs\1313\1313 - Alexandra Park\DWG\1313M-38CONTRACT.Dwg Plotted: Mar 12, 2014 - 3:45pm

AIR HANDLING UNIT

SYMBOL	MANUFACTURER	MODEL	DUTY	CHILLED WATER COIL SECTION: AIR FLOW (CFM)	EAT (DB/WB) (°F)	LAT (DB/WB) (°F)	TOTAL CAP. (MBH)	SEN. CAP (MBH)	EST (°F)	LST (°F)	FLOW (USGPM)	FLUID	WPD (FT.)	APD (IN.)	FACE AREA (SQFT)	FARR VEL. (FPM)	SIZE	ROWS	FPI	HEATING COIL SECTION: AIR FLOW (CFM)	EAT (DB/WB) (°F)	LAT (DB/WB) (°F)	TOTAL CAP. (MBH)	EST (°F)	LST (°F)	FLOW (USGPM)	FLUID	WPD (FT.)	APD (IN.)	FACE AREA (SQFT)	FARR VEL. (FPM)	SIZE	ROWS	FPI	SUPPLY FAN SECTION E.S.P./HP	REMARKS
AHU-1	YORK	SOLUTION SOV-A10	FRESH AIR	16,000 (13,500 MAX)	1.1.4	57.2/56.6	1273.00 0	1273.00 0	45	55	204.3.00 0	WATER	8.8	0	35.5.00 0	496	57.3×49	4	12	16,000 (13,500 MAX)	-10.0	74.3	2.3.0.1	0.0	15	2.7.8.1000	40% E GLYCOL	8.8	0.26	5.0	4.7.0	60×50	3	11	2.5" 2.5	FAN TO CAU ABB VFD AI BYPASS, CLG COIL TO HAVE FACE AND 2.5% BYPASS DAMPER, INLET MOTORIZED DAMPER, PRESSTAT TO SHUT DOWN FAN AND INLET MOTORIZED DAMPER. "ERV 1) FILTERS AND "ERV 2 PREFILTER, WITH MAGNAHELIC GAUGES TO MONITOR DIFFERENTIAL PRESSURE OF AIR FILTERS. UNIT SHALL HAVE SPARE CAPACITY TO SUPPLY 5.6.0.0CFM AIRFLOW.

FAN COIL UNIT (IN SUITE WITH INTEGRATE ERV)

FAN SECTION: SYMBOL	MAKE	MODEL	DESCRIPTION	DUTY	AIR FLOW	ESP (IN)	HP	VIMAZ	CHILLED WATER COIL PERFORMANCE: SUPPLY AIR (ERV) (CFM)	SUPPLY AIR (COIL) (CFM)	ERV INLET AIR TEMP (°F)	ERV SUPPLY AIR TEMP (°F)	LAT (°F)	TOTAL CAP. (MBH)	SEN. CAP (MBH)	EST (°F)	LST (°F)	FLOW (USGPM)	WPD (FT.)	HEATING WATER COIL PERFORMANCE: SUPPLY AIR (ERV) (CFM)	SUPPLY AIR (COIL) (CFM)	ERV INLET AIR TEMP (°F)	ERV SUPPLY AIR TEMP (°F)	LAT (°F)	TOTAL CAP. (MBH)	SEN. CAP (MBH)	EST (°F)	LST (°F)	FLOW (USGPM)	REMARKS

FAN COIL UNIT (IN SUITE WITHOUT ERV)

FAN SECTION: SYMBOL	MAKE	MODEL	DESCRIPTION	DUTY	AIR FLOW	ESP (IN)	HP	VIMAZ	CHILLED WATER COIL PERFORMANCE: EAT (DB/WB) (°F)	LAT (DB/WB) (°F)	TOTAL CAP. (MBH)	SEN. CAP (MBH)	EST (°F)	LST (°F)	FLOW (USGPM)	WPD (FT.)	HEATING WATER COIL PERFORMANCE: EAT (DB) (°F)	LAT (DB) (°F)	TOTAL CAP. (MBH)	GLYCOL	EST (°F)	LST (°F)	FLOW (USGPM)	WPD (FT.)	WEIGHTS (LBS)	REMARKS
TFC-1.5T	UNILUX	DLE6.00	2-PIPE VERTICAL FAN COIL	IN-SUITE	450	0.2	1/6	115/1.0	78.0/.1	55.7/5.5	1.4.5	1.0	45	55	2.6	2.5	70	1.00	26.8	0%	140	0.0	3.8	2.5		CAU ECM MOTOR, SKU HEATER AND RISERS, RISER SIZE SHALL MATCH RISER DIAGRAM, 3 WAY CONTROL VALVE, THERMAL METERS, PROGRAMMABLE HEATING/COOLING THERMOSTAT. HONEYWELL T8775B1A1000 OR EQUAL! RETURN AIR LOUVRE "ERV 8 FILTER. FCU TO BE PLACED ON RAISED LEGS. SUCH THAT THE TOP OF THE SIDEWALL SUPPLY AIR GRILLE ARE TO BE 300MM BELOW CEILING.
TFC-2.5T	UNILUX	DLE8.00	2-PIPE VERTICAL FAN COIL	IN-SUITE	5.0.0	0.2	1/6	1.8/1.6.0	78.0/.1	55.7/5.5	1.5.2	7.0	45	55	3.8	4.3	70	1.00	32.4	0%	140	0.0	3.8	4.3		
TFC-3T	UNILUX	DLE9.00	2-PIPE VERTICAL FAN COIL	IN-SUITE	6.5.0	0.2	1/3	1.8/1.6.0	78.0/.1	54.5/53.1	2.6.1	9.0	45	55	5.5	1	70	1.00	42.5	0%	140	0.0	5.5	1		

FAN COIL UNIT (IN SUITE WITHOUT ERV)

FAN SECTION: SYMBOL	MAKE	MODEL	DESCRIPTION	DUTY	AIR FLOW	ESP (IN)	HP	VIMAZ	CHILLED WATER COIL PERFORMANCE: EAT (DB/WB) (°F)	LAT (DB/WB) (°F)	TOTAL CAP. (MBH)	SEN. CAP (MBH)	EST (°F)	LST (°F)	FLOW (USGPM)	WPD (FT.)	HEATING WATER COIL PERFORMANCE: EAT (DB) (°F)	LAT (DB) (°F)	TOTAL CAP. (MBH)	GLYCOL	EST (°F)	LST (°F)	FLOW (USGPM)	WPD (FT.)	WEIGHTS (LBS)	REMARKS
TFC-1T	UNILUX	DLE4.00	2-PIPE VERTICAL FAN COIL	IN-SUITE	450	0.2	1/6	115/1.0	78.0/.1	55.7/5.5	1.4.5	1.0	45	55	2.6	2.5	70	1.00	26.8	0%	140	0.0	3.8	2.5		CAU ECM MOTOR, SKU HEATER AND RISERS, RISER SIZE SHALL MATCH RISER DIAGRAM, 3 WAY CONTROL VALVE, THERMAL METERS, PROGRAMMABLE HEATING/COOLING THERMOSTAT. HONEYWELL T8775B1A1000 OR EQUAL! RETURN AIR LOUVRE "ERV 8 FILTER. FCU TO BE PLACED ON RAISED LEGS. SUCH THAT THE TOP OF THE SIDEWALL SUPPLY AIR GRILLE ARE TO BE 300MM BELOW CEILING.
TFC-1.5T	UNILUX	DLE6.00	2-PIPE VERTICAL FAN COIL	IN-SUITE	5.0.0	0.2	1/6	1.8/1.6.0	78.0/.1	55.7/5.5	1.5.2	7.0	45	55	3.8	4.3	70	1.00	32.4	0%	140	0.0	3.8	4.3		
TFC-2T	UNILUX	DLE8.00	2-PIPE VERTICAL FAN COIL	IN-SUITE	6.5.0	0.2	1/3	1.8/1.6.0	78.0/.1	54.5/53.1	2.6.1	9.0	45	55	5.5	1	70	1.00	42.5	0%	140	0.0	5.5	1		

FAN COIL UNIT (AMENITY AND COMMON AREAS)

FAN SECTION: SYMBOL	MAKE	MODEL	DESCRIPTION	DUTY	AIR FLOW	ESP (IN)	HP	VIMAZ	CHILLED WATER COIL PERFORMANCE: EAT (DB/WB) (°F)	LAT (DB/WB) (°F)	TOTAL CAP. (MBH)	SEN. CAP (MBH)	EST (°F)	LST (°F)	FLOW (USGPM)	WPD (FT.)	HEATING WATER COIL PERFORMANCE: EAT (DB) (°F)	LAT (DB) (°F)	TOTAL CAP. (MBH)	GLYCOL	EST (°F)	LST (°F)	FLOW (USGPM)	WPD (FT.)	EAT (DB/WB) (°F)	LAT (DB/WB) (°F)	TOTAL CAP. (MBH)	SEN. CAP (MBH)	REFRIG. TYPE	COIL PV (PPM)	SUCTION CONN. (IN)	LIQUID CONN. (IN)	SYMBOL	HORIZONTAL DISCHARGE CONDENSER: MODEL	VIMAZ	MCA	FUSE SIZE	WEIGHT (LBS)	REMARKS

CAU ECM MOTOR, SKU HEATER AND RISERS, RISER SIZE SHALL MATCH RISER DIAGRAM, 3 WAY CONTROL VALVE, THERMAL METERS, PROGRAMMABLE HEATING/COOLING THERMOSTAT. HONEYWELL T8775B1A1000 OR EQUAL! RETURN AIR LOUVRE "ERV 8 FILTER. FCU TO BE PLACED ON RAISED LEGS. SUCH THAT THE TOP OF THE SIDEWALL SUPPLY AIR GRILLE ARE TO BE 300MM BELOW CEILING.

SPLIT HEAT PUMP SYSTEM

SYMBOL	MAKE	MODEL	DESCRIPTION	AIR FLOW (CFM)	ESP (IN)	TOT. HTG. CAP. (MBH)	TOT. CLG. CAP. (MBH)	SEN. CLG. CAP. (MBH)	MCA	MOCP	VIMAZ	WT. (LBS)	REMARKS

SELF-CONTAINED COOLING UNIT (FOR RETAIL)

SYMBOL	MAKE	MODEL	DESCRIPTION	AIR FLOW (CFM)	ESP (IN)	TOT. HTG. CAP. (MBH)	TOT. CLG. CAP. (MBH)	SEN. CLG. CAP. (MBH)	MCA	MOCP	VIMAZ	WT. (LBS)	REMARKS

INSTANTANEOUS INDIRECT WATER HEATER

SYMBOL	MAKE	MODEL	DESCRIPTION	TANK VOLUME (US GAL.)	HEAT TRANSFER AREA (SQ. FT.)	UTILITY CONNECTION	BOILER CONNECTION	DIMENSIONS	REMARKS

COOLING TOWER SCHEDULE

SYMBOL	MAKE	MODEL	DESCRIPTION	DUTY	NOM. TONS	GPM	P.D. FT.	ENTER. WTR. °F	LVG. WTR. °F	CFM	FAN HP	FAN VIMZ	WEIGHT (LBS)	SIZE	REMARKS
CT-1	BALTIMORE AIRCOIL	83E-222-07P	OPEN COOLING TOWER SINGLE CELL	CONDENSER WATER	6.0.0	1,8.0.0	-	95	85	14,5.6.0	4.0	NIL	24,0.0.0	5'.W.X7'.L.X12'.H	CAU ABB VFD WITH BACNET COMPATIBLE WITH SIEMENS CONTROLS, ACCESS LADDER + HANDRAILS, CONTROL POWER PANEL, 1.5 INCHES DEFLECTION ISOLATORS/ 2 LAYERS OF SAPELED NEOPRENE PADS.

BOILER SCHEDULE

SYMBOL	MAKE	MODEL	DESCRIPTION	DUTY	INPUT (MBH)	OUTPUT (MBH)	GPM	↑ T	P.D. FT	ENTER WTR. °F	LVG WTR. °F	WGHT (LBS)	VENT FLUE	INTAKE FLUE	SIZE	GAS	WATER CONNECTION	ELECTRICAL VOLTAGE	ELECTRICAL AMPERE	MOCP	CIR. HP	CIR. VOLTAGE	REMARKS

PUMP SCHEDULE

(ALL MOTORS SHALL BE HI-EFF. TYPE, ABB VFD WITH BACNET COMPATIBLE WITH SIEMENS CONTROLS)

SYMBOL	MAKE	MODEL	DESCRIPTION	DUTY	GPM	FT HEAD	RPM	HP	VIMAZ	WEIGHT	REMARKS
DCBSP-1	ARMSTRONG	4.0.0.0 1-5-DE-2.6-241	DOMESTIC BOOSTER DUPLEX PACKAGE SYSTEM	DOMESTIC COLD WATER BOOSTER	21.0	3.6.1	3.4.0.0	3.0	5.7.5/3.4.0	2.2.8.4	C/U VFD, CONTROL PANEL
DCBSP-2											

PLATE HEAT EXCHANGERS

SYMBOL	MAKE	MODEL	DESCRIPTION	DUTY	HEAT TRANSFER (MBH)	SIDE 1: ENTER	LIST	FLOW (USGPM)	P.D. (psi)	FLUID	SIDE 2: ENTER	LIST	FLOW (USGPM)	P.D. (psi)	FLUID	WGHT (LBS)	REMARKS

HOT WATER EQUIPMENT SCHEDULE

SYMBOL	MAKE	MODEL	DESCRIPTION	DUTY	HEAT TRANSFER (MBH)	HOT WATER COIL: ENTER	LIST	FLOW (USGPM)	CFM	ESP.	HP.	VIMAZ	WGHT (LBS)	REMARKS

FAN SCHEDULE

NOTE:
- ALL MOTOR 1 HP AND ABOVE SHALL BE HIGH-EFFICIENCY TYPE. - ALL FANS 1.5 HP AND LARGER TO BE CAU H.O.A. STARTER
- VFD TO BE ABB CAU BACNET COMPATIBLE WTH SIEMENS CONTROLS

SYMBOL	MAKE	MODEL	DESCRIPTION	DUTY	CFM	ESP (")	RPM	HP	VIMAZ	FAN DIMENSIONS	BALL OPENING	WEIGHT	REMARKS
EF-1.4	ZONEX	DSF1.8.0	N/LINE	DRYER EXHAUST	1.4.0	0.4	0.7.5.0	"2.5	0.2.0/1.6.0			1.1	CAU LINT TRAP, RELAY TO INTERLOCK AI DRYER.
EF-1.5	ZONEX	GF1.5.0	N/LINE	WASHROOM EXHAUST	1.0.0	0.2.5	"0.0.0	6.3.0	0.2.0/1.6.0			1.4	CAU BLDD, EXTRA LARGE HOUSING + SLIDING DAMPER, SOUND DATA NOT MORE THAN 1 SONE + ENERGY STAR COMPLIANT.
EF-1	CARNES	LVTC.K.0K.	WALL PROPELLER	P-2 STORAGE ROOM EXHAUST	3.0.0	0.2.5	1.7.3	1/6	0.2.0/1.6.0			4.0	CAU MOTORIZED DAMPER, WALL HOUSING WTH GUARD, SWTCH, DAMPER GUARD + SPEED CONTROLLER.
EF-2	CARNES	LVTC.K.0K.	WALL PROPELLER	P-2 RESI. STORAGE ROOM 1 EXHAUST	0.0.0	0.2.5	8.6.7	1/6	0.2.0/1.6.0			5.0	CAU MOTORIZED DAMPER, WALL HOUSING WTH GUARD, SWTCH, DAMPER GUARD + SPEED CONTROLLER.
EF-3	CARNES	LVTC.K.0K.	WALL PROPELLER	P-2 RESI. STORAGE ROOM 2 EXHAUST	5.0.0	0.2.5	0.4.0	1/6	0.2.0/1.6.0			4.2	CAU MOTORIZED DAMPER, WALL HOUSING WTH GUARD, SWTCH, DAMPER GUARD + SPEED CONTROLLER.
EF-4	CARNES	VBK.0.L.	N-LINE	P-2 RESI. STORAGE ROOM 3 EXHAUST	1.7.5.0	0.2.5	8.8.1	1/4	0.2.0/1.6.0				CAU BDD, ISOLATION KIT, AND SWTCH.
EF-5	CARNES	LVTC.K.0K.	WALL PROPELLER	P-2 STORAGE ROOM	3.0.0	0.2.5	1.7.3	1/6	0.2.0/1.6.0			4.0	CAU MOTORIZED DAMPER, WALL HOUSING WTH GUARD, SWTCH, DAMPER GUARD + SPEED CONTROLLER.
EF-6	CARNES	LVTC.K.0K.	WALL PROPELLER	P-1 GENERATOR ROOM EXHAUST	5.0.0	0.2.5	0.4.0	1/6	0.2.0/1.6.0			4.2	CAU MOTORIZED DAMPER, WALL HOUSING WTH GUARD, THERMOSTAT, DAMPER GUARD + SPEED CONTROLLER.
EF-7	CARNES	LVTC.K.0K.	WALL PROPELLER	P-1 LOCKER ROOM	3.0.0	0.2.5	1.7.3	1/6	0.2.0/1.6.0			4.0	CAU MOTORIZED DAMPER, WALL HOUSING WTH GUARD, SWTCH, DAMPER GUARD + SPEED CONTROLLER.
EF-8	CARNES	LVTC.K.2.5H	WALL PROPELLER	P-1 COPPINCATION ROOM	3.0.0	0.2.5	1.2.0.1	1/2	0.2.0/1.6.0			3.5	CAU MOTORIZED DAMPER, WALL HOUSING WTH GUARD, THERMOSTAT, DAMPER GUARD + SPEED CONTROLLER.
EF-9	CARNES	LVTC.K.0K.	WALL PROPELLER	P-1 AAU ROOM EXHAUST	5.0.0	0.2.7.5	8.7.5	1/6	0.2.0/1.6.0			4.2	CAU MOTORIZED DAMPER, WALL HOUSING WTH GUARD, THERMOSTAT, DAMPER GUARD + SPEED CONTROLLER.
EF-1.0	CARNES	VBK.0.R	N-LINE	P-1 CHILLER ROOM EXHAUST	3,0.0.0	0.2.7.5	1.5.5	3/4	5.7.5/3.4.0			1.6.3	CAU BLDD, ISOLATION KIT, SWTCH + H.O.A. STARTER(2- SPEED MOTOR (1 ST SPEED TO T-STAT, FULL SPEED TO REFRIGE SENSOR)
EF-1.1	CARNES	LVEK.K.2.5	WALL PROPELLER	P-1 TRANSFORMER ROOM EXHAUST	4.0.0.0	0.2.7.5	1.6.4	1	5.7.5/3.4.0			8.1	CAU MOTORIZED DAMPER, WALL HOUSING WTH GUARD, THERMOSTAT, DAMPER GUARD + SPEED CONTROLLER.
EF-1.2	CARNES	LVTC.K.0K.	WALL PROPELLER	P-1 RESI. STORAGE ROOM EXHAUST	1.0.0	0.2.5	8.6.7	1/6	0.2.0/1.6.0			5.0	CAU MOTORIZED DAMPER, WALL HOUSING WTH GUARD, SWTCH, DAMPER GUARD + SPEED CONTROLLER.
EF-1.3	CARNES	LVTC.K.0K.	WALL PROPELLER	P-1 MECH. ROOM (TURBOCHAX) EXHAUST	2.5.0	0.2.5	1.1.8	1/6	0.2.0/1.6.0			4.0	CAU MOTORIZED DAMPER, WALL HOUSING WTH GUARD, THERMOSTAT, DAMPER GUARD + SPEED CONTROLLER.
EF-1.4	CARNES	LVTC.K.2.5H	WALL PROPELLER	P-1 LOCKER ROOM EXHAUST	1.5.0	0.2.5	5.7.0	1/2	0.2.0/1.6.0			3.5	CAU MOTORIZED DAMPER, WALL HOUSING WTH GUARD, SWTCH, DAMPER GUARD + SPEED CONTROLLER.
EF-1.5	CARNES	LVTC.K.0K.	WALL PROPELLER	P-1 MECH/SPRINK. ROOM	6.0.0	0.2.5	1.3.6.6	1/6	0.2.0/1.6.0			4.2	CAU MOTORIZED DAMPER, WALL HOUSING WTH GUARD, THERMOSTAT, DAMPER GUARD + SPEED CONTROLLER.
EF-1.6	CARNES	LVTC.K.0K.	WALL PROPELLER	P-1 COPPINCATION ROOM 2 EXHAUST	3.0.0	0.2.5	1.7.3	1/6	0.2.0/1.6.0			4.0	CAU MOTORIZED DAMPER, WALL HOUSING WTH GUARD, THERMOSTAT, DAMPER GUARD + SPEED CONTROLLER.
EF-1.7	CARNES	LVEK.K.3.4	WALL PROPELLER	P-2 PARKING EXHAUST	2,1.0.0.0	0.2.5	5.1.5	3	5.7.5/3.4.0			3.7.0	CAU MOTORIZED DAMPER, WALL HOUSING WTH GUARD, DAMPER GUARD, VFD STEP CONTROL TYPE (6 ST-PHASE) AND WEATHERPROOF MOTOR, 6.0.0V/3V STEP DOWN TRANSFORMER FOR MOTORIZED DAMPER. THE FAN SHALL BE ACTIVATED AND RUN AT 50% SPEED UPON RECEIPT OF CO SIGNAL FROM CO SENSOR / SYSTEM 1. THE CO SIGNAL STILL PRESENCE AFTER CONTINUOUS RUNNING FOR 10 MINUTES, THE FAN SHALL BE SWITCHED TO FULL SPEED AND RUN UNTIL THE CO SIGNAL IS OUT.
EF-1.8	CARNES	LVEK.K.0K.	WALL PROPELLER	P-1 PARKING EXHAUST	3.7.0.0	0.2.5	5.1.2	5	5.7.5/3.4.0			4.8.0	CAU MOTORIZED DAMPER, WALL HOUSING WTH GUARD, DAMPER GUARD, VFD STEP CONTROL TYPE (6 ST-PHASE) AND WEATHERPROOF MOTOR, 6.0.0V/3V STEP DOWN TRANSFORMER FOR MOTORIZED DAMPER. THE FAN SHALL BE ACTIVATED AND RUN AT 50% SPEED UPON RECEIPT OF CO SIGNAL FROM CO SENSOR / SYSTEM 1. THE CO SIGNAL STILL PRESENCE AFTER CONTINUOUS RUNNING FOR 10 MINUTES, THE FAN SHALL BE SWITCHED TO FULL SPEED AND RUN UNTIL THE CO SIGNAL IS OUT.
EF-1.9	CARNES	VBK.0.M	N-LINE	G/F BIKE STORAGE ROOM EXHAUST	1.4.0.0	0.2.7.5	1.6.3	1/3	0.2.0/1.6.0			1.2.1	CAU BDD, ISOLATION KIT, AND SWTCH.
EF-1.0	CARNES	VBK.0.R	N-LINE	G/F GARBAGE ROOM EXHAUST	3,0.0.0	0.2.7.5	1.5.5	3/4	5.7.5/3.4.0			1.6	CAU MOTORIZED DAMPER, WALL HOUSING WTH GUARD, DAMPER GUARD, THERMOSTAT, HOA STARTER AND SPEED CONTROLLER
EF-1.1	CARNES	VBK.0.M	N-LINE	G/F MOVING ROOM EXHAUST	1,3.0.0	0.2.7.5	5.3.0	5/6	0.2.0/1.6.0			1.2.1	CAU BDD, ISOLATION KIT, SWTCH + H.O.A. STARTER.
EF-1.2	CARNES	LVTC.K.7L	WALL PROPELLER	M/F BOILER ROOM EXHAUST	1,2.0.0	0.2.7.5	1.0.6.4	1/4	0.2.0/1.6.0			4.0	CAU BLDD, ISOLATION KIT, SWTCH + H.O.A. STARTER.
EF-1.3	WOODS		N-LINE	STAIR PRESSURIZATION	3,0.0.0	1	3.5.0.0	1	5.7.5/3.4.0			1.6.0	CAU BLDD, ISOLATION KIT + H.O.A. STARTER /+ VOLTAGE SENSING TIME DELAY RELAY SETTING (2-15+)

GRILLE AND DIFFUSER SCHEDULE

(ALL GRILLES AND DIFFUSERS HAVE STANDARD WHITE FINISH UNLESS SPECIFIED ELSEWHERE)

SYMBOL	MAKE	MODEL	DESCRIPTION	SIZE	REMARKS
SG-1.A	EH PRICE	S.4.0	SINGLE DEFLECTION SUPPLY AIR GRILLE	3.0.0×1.0.0	C/U MULTI-DAMPER, COLOUR TO BE COORDINATED WITH ARCHITECT.
SG-1.B	EH PRICE	S.4.0	SINGLE DEFLECTION SUPPLY AIR GRILLE	3.0.0×5.0	C/U MULTI-DAMPER, COLOUR TO BE COORDINATED WITH ARCHITECT.
SG-1.C	EH PRICE	S.4.0	SINGLE DEFLECTION SUPPLY AIR GRILLE	4.0.0×5.0	C/U MULTI-DAMPER, COLOUR TO BE COORDINATED WITH ARCHITECT.
SG-1.D	EH PRICE	S.4.0	SINGLE DEFLECTION SUPPLY AIR GRILLE	4.0.0×1.5.0	C/U MULTI-DAMPER, COLOUR TO BE COORDINATED WITH ARCHITECT.
SG-1.1	EH PRICE	C.V.D	TWO WAY CURVED VANE DIFFUSER	SEE DWG.	C/U O.B.D, COLOUR TO BE COORDINATED WITH INTERIOR DESIGNER.
SG-1.2	EH PRICE	S.1.D	SINGLE DEFLECTION SUPPLY AIR GRILLE	SEE DWG.	C/U O.B.D, COLOUR TO BE COORDINATED WITH INTERIOR DESIGNER.
SG-1.3	EH PRICE	6.1.D.A.L	SINGLE DEFLECTION ALUMINUM SUPPLY AIR GRILLE	SEE DWG.	C/U ALUMINUM O.B.D, COLOUR TO BE COORDINATED WITH INTERIOR DESIGNER.
SD-1.1	EH PRICE	S.C.D	4 WAY SUPPLY AIR DIFFUSER	6.0.0×6.0.0	C/U O.B.D, COLOUR TO BE COORDINATED WITH INTERIOR DESIGNER.
SD-1.2	EH PRICE	S.C.D	4 WAY SUPPLY AIR DIFFUSER	3.0.0×3.0.0	C/U O.B.D, COLOUR TO BE COORDINATED WITH INTERIOR DESIGNER.
LD-1.1	EH PRICE	S.D.B.1.0.0	4 SLOT LINEAR DIFFUSER	1,2.0.0 LENGTH	C/U O.B.D + PLENUM, COLOUR TO BE COORDINATED WITH INTERIOR DESIGNER.
LD-1.2	EH PRICE	S.D.B.1.0.0	3 SLOT LINEAR DIFFUSER	1,2.0.0 LENGTH	C/U O.B.D + PLENUM, COLOUR TO BE COORDINATED WITH INTERIOR DESIGNER.
LD-1.3	EH PRICE	S.D.B.1.0.0	2 SLOT LINEAR DIFFUSER	1,2.0.0 LENGTH	C/U O.B.D + PLENUM, COLOUR TO BE COORDINATED WITH INTERIOR DESIGNER.
EG-1	EH PRICE	6.1.D.A.L	SINGLE DEFLECTION ALUMINUM EXHAUST AIR GRILLE	SEE DWG.	C/U ALUMINUM O.B.D, COLOUR TO BE COORDINATED WITH INTERIOR DESIGNER.
EG-1.2	EH PRICE	S.1.D	SINGLE DEFLECTION EXHAUST AIR GRILLE	SEE DWG.	C/U O.B.D, COLOUR TO BE COORDINATED WITH ARCHITECT
EG-1.3	EH PRICE	6.D.D.A.L	EGG CRATE EXHAUST AIR GRILLE	SEE DWG.	C/U ALUMINUM O.B.D, COLOUR TO BE COORDINATED WITH INTERIOR DESIGNER.
RG-1	EH PRICE	E.D	EGG CRATE RETURN AIR GRILLE	6.0.0×6.0.0	COLOUR TO BE COORDINATED WITH INTERIOR DESIGNER.
RG-1.2	EH PRICE	E.D	EGG CRATE RETURN AIR GRILLE	3.0.0×3.0.0	COLOUR TO BE COORDINATED WITH INTERIOR DESIGNER.
RG-1.3	EH PRICE	E.D	EGG CRATE RETURN AIR GRILLE	6.0.0×3.0.0	COLOUR TO BE COORDINATED WITH INTERIOR DESIGNER.
LRD-1.1	EH PRICE	S.C.R.0.0.0	2 SLOT LINEAR RETURN AIR DIFFUSER	1,2.0.0 LENGTH	C/U RETURN AIR PLENUM AND PAINTED BLACK INSIDE, COLOUR TO BE COORDINATED WITH INTERIOR DESIGNER.
LRD-1.2	EH PRICE	S.C.R.0.0.0	3 SLOT LINEAR RETURN AIR DIFFUSER	1,2.0.0 LENGTH	C/U RETURN AIR PLENUM AND PAINTED BLACK INSIDE, COLOUR TO BE COORDINATED WITH INTERIOR DESIGNER.

PRIORITY	1	ISSUED FOR ...	E.P.
DATE	NO.	DESCRIPTION	BY

THANK VOID ALL PRINTS DATED PREVIOUS TO FINAL DATE ABOVE

REVISIONS

CONTRACTOR MUST CHECK AND VERIFY ALL DIMENSIONS AND CONDITIONS ON THE JOB AND REPORT DISCREPANCIES TO THE ENGINEERS BEFORE PROCEEDING WITH THE WORK. THIS DRAWING IS THE PROPERTY OF THE ENGINEERS AND MUST BE RETURNED UPON COMPLETION OF THE WORK.

DRAWINGS ARE NOT TO BE SCALED

NOVA TREND ENGINEERING

173 West Beaver Creek Road, Unit 31
Richmond Hill, Ontario L4B 3M1
Tel: 905 882-5445
Fax: 905 882-5447
Email: cad@novatrendeng.com

DRAWING TITLE: SCHEDULES

PROJECT TITLE: ALEXANDRA PARK

XXX
TORONTO ONTARIO

DRAWN BY:	CHECKED BY:	SCALE:
G.S.	E.P.	N.T.S.
DATE: FEB. 13	PROJECT NUMBER: 1313	DRAWING NUMBER: M-3.9 OF 3.9

Drawing name: \\CADSERVER\Current Dwg's\1313 - Alexandra Park\DWG\1313M-3.9SCHEDULES.dwg Plotted: Mar 12, 2014 - 3:45pm