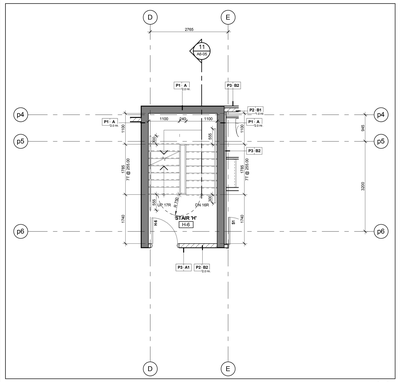

Stair 'H' - Stair Plan - Level 6 (15 / A6-04)
Scale: 1 : 50

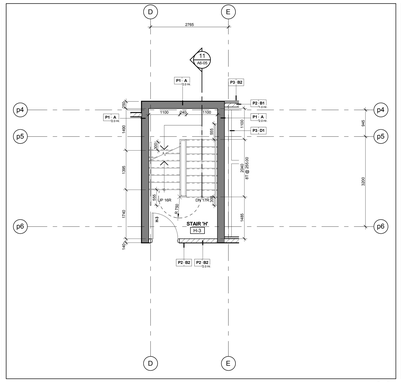

Stair 'H' - Stair Plan - Level 3 (12 / A6-04)
Scale: 1 : 50

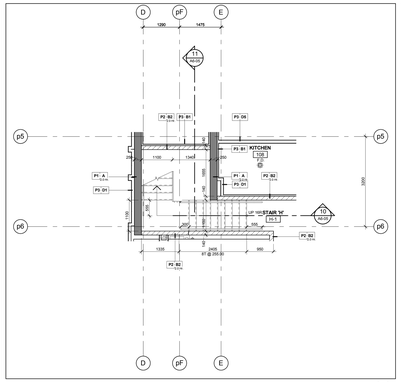

Stair 'H' - Stair Plan - Level 1 (9 / A6-04)
Scale: 1 : 50

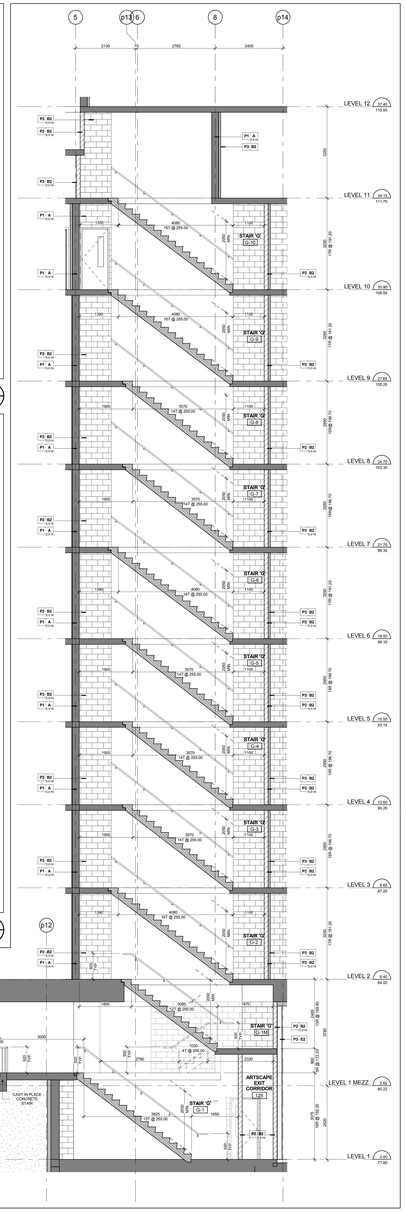

Stair 'G' - Stair Section Levels 1 - 12 (7 / A6-04)
Scale: 1 : 50

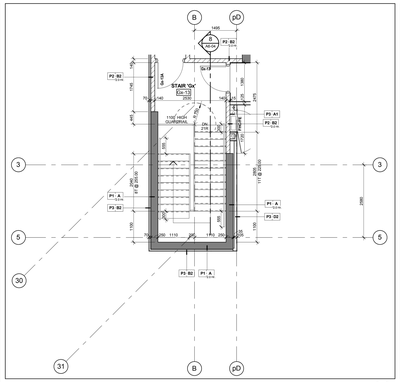

Stair 'Gx' - Stair Plan - Level 13 (6 / A6-04)
Scale: 1 : 50

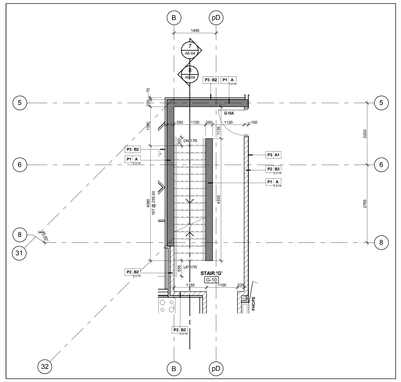

Stair 'G' - Stair Plan - Level 10 (3 / A6-04)
Scale: 1 : 50

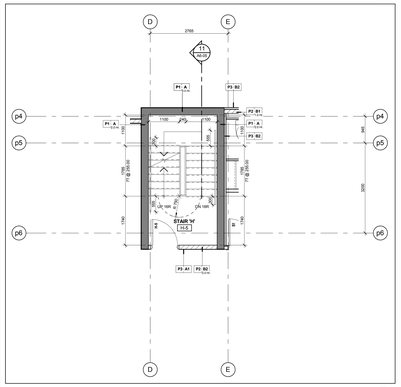

Stair 'H' - Stair Plan - Level 5 (14 / A6-04)
Scale: 1 : 50

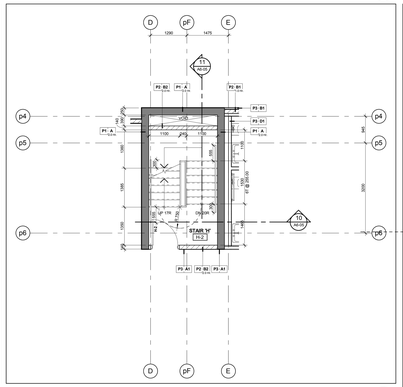

Stair 'H' - Stair Plan - Level 2 (11 / A6-04)
Scale: 1 : 50

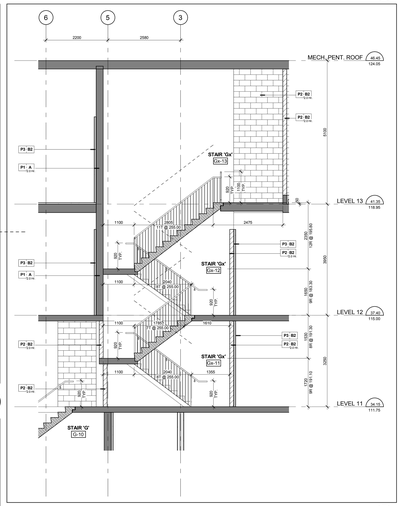

Stair 'Gx' - Stair Section Levels 11 - Mechanical Penthosue Roof (8 / A6-04)
Scale: 1 : 50

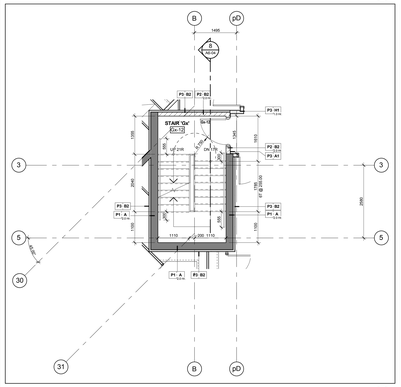

Stair 'Gx' - Stair Plan - Level 12 (5 / A6-04)
Scale: 1 : 50

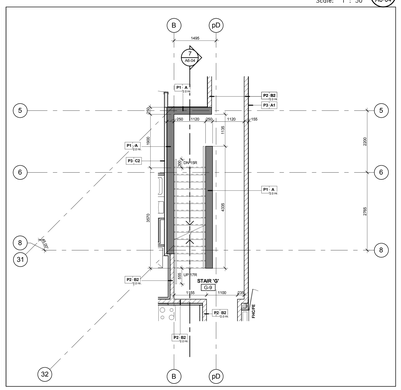

Stair 'G' - Stair Plan - Level 9 (2 / A6-04)
Scale: 1 : 50

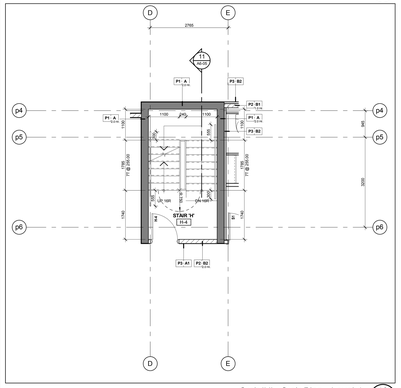

Stair 'H' - Stair Plan - Level 4 (13 / A6-04)
Scale: 1 : 50

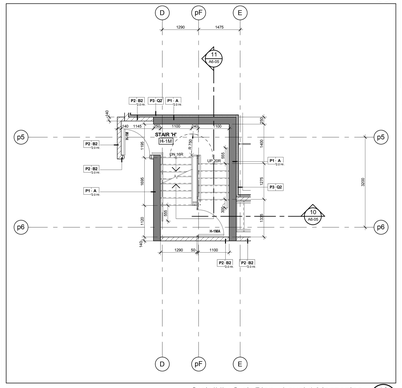

Stair 'H' - Stair Plan - Level 1 Mezzanine (10 / A6-04)
Scale: 1 : 50

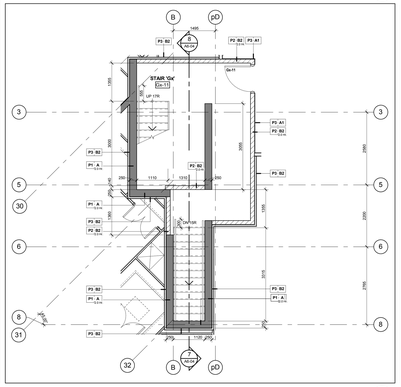

Stair 'Gx' - Stair Plan - Level 11 (4 / A6-04)
Scale: 1 : 50

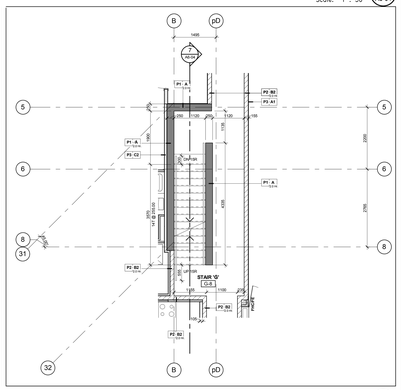

Stair 'G' - Stair Plan - Level 8 (1 / A6-04)
Scale: 1 : 50

Contractor Must Check And Verify All Dimensions On The Job.

Do Not Scale The Drawings.

All Drawings, Specifications And Related Documents Are The Copyright Of The Architect And Must Be Returned Upon Request.

Reproduction Of Drawings, Specifications And Related Documents In Part Or Whole Is Forbidden Without The Architects Written Permission.

This Drawing Is Not To Be Used For Construction Until Signed By The Architect.

Date: June 12, 2015

THIS SEAL MUST BE SIGNED TO BE VALID

Building Permit

KIRKOR ARCHITECTS + PLANNERS
20 Martin Ross Avenue, Toronto, Ontario, M3J 2K8
TAT.(416) 665-6565, FAX.(416) 665-1234, www.kirkorarchitects.com

No.	Revision	Date

No.	Issued For	Date
2.	Building Permit	June 12, 2015
1.	Waterfront Toronto Review	May 1, 2015

AQUAVISTA
AT BAYSIDE TORONTO

Drawing Title
Stair Plans & Sections
Stair 'G', 'Gx' & 'H' Plans and Sections

Project
Hines TRIDEL
AQUAVISTA
Block 3 - R3 & R4
263 Queens Quay East
Toronto, ON

Scale 1 : 50
Drawn by M.R.
Checked by C.A.
Project No. 13148
Date June 12, 2015
Drawing No. A6-04