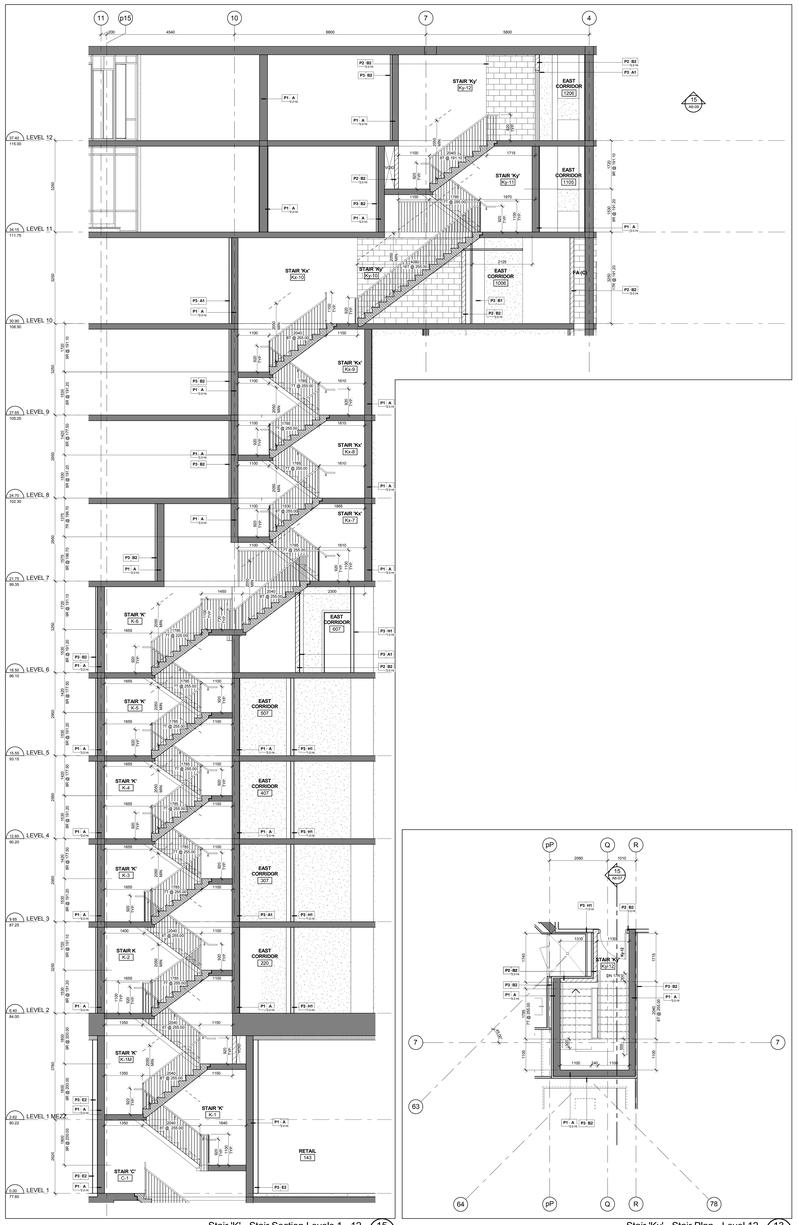

Stair 'K' - Stair Section Levels 1 - 12 (15 / A6-07)
Scale: 1 : 50

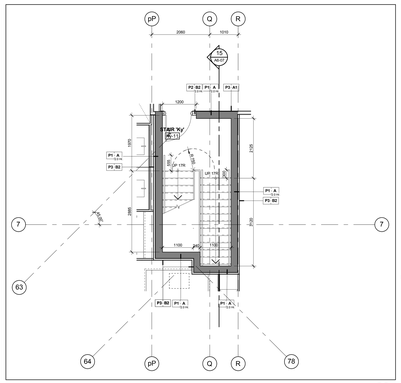

Stair 'Ky' - Stair Plan - Level 11 (12 / A6-07)
Scale: 1 : 50

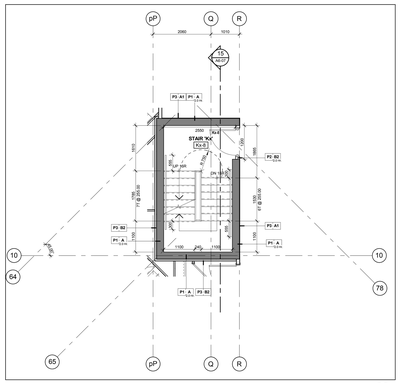

Stair 'Kx' - Stair Plan - Level 8 (9 / A6-07)
Scale: 1 : 50

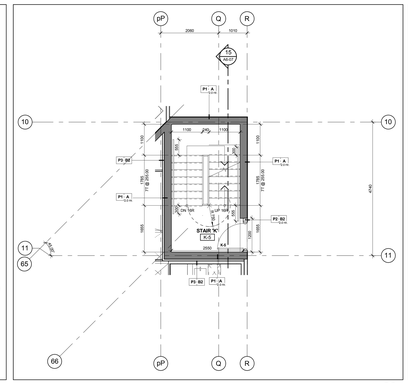

Stair 'K' - Stair Plan - Level 5 (6 / A6-07)
Scale: 1 : 50

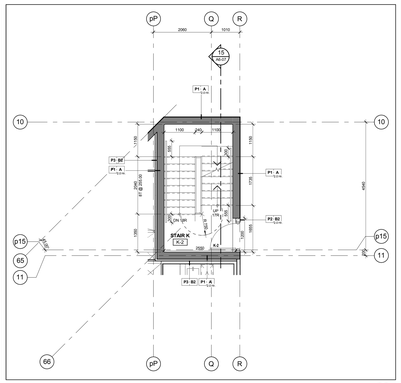

Stair 'K' - Stair Plan - Level 2 (3 / A6-07)
Scale: 1 : 50

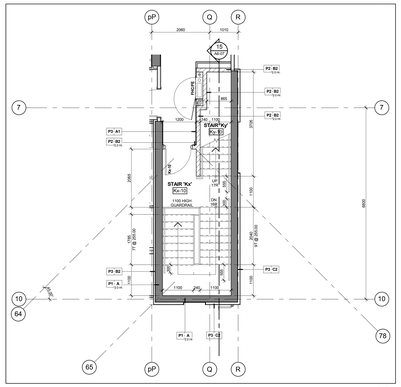

Stair 'Kx' & 'Ky' - Stair Plan - Level 10 (11 / A6-07)
Scale: 1 : 50

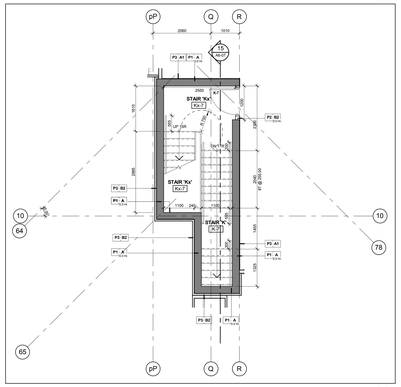

Stair 'K' & 'Kx' - Stair Plan - Level 7 (8 / A6-07)
Scale: 1 : 50

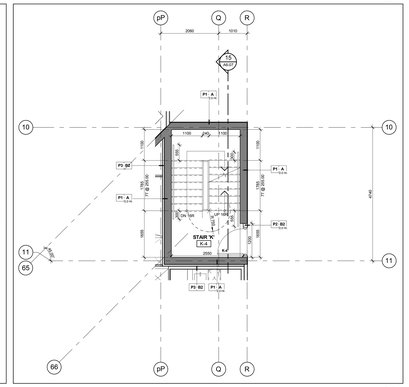

Stair 'K' - Stair Plan - Level 4 (5 / A6-07)
Scale: 1 : 50

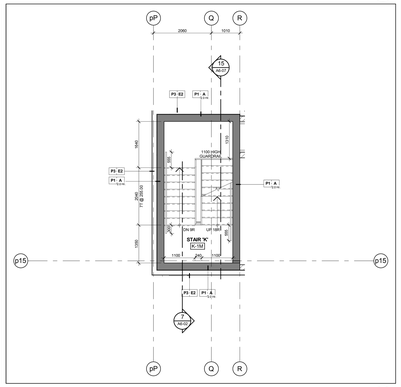

Stair 'K' - Stair Plan - Level 1Mezzanine (2 / A6-07)
Scale: 1 : 50

Stair 'Ky' - Stair Plan - Level 12 (13 / A6-07)
Scale: 1 : 50

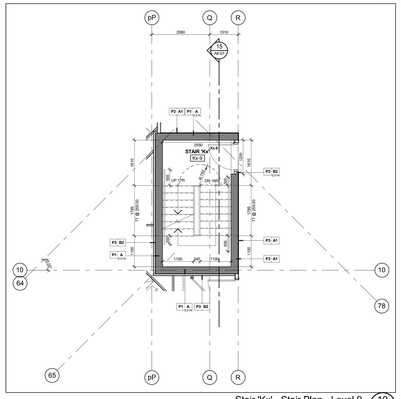

Stair 'Kx' - Stair Plan - Level 9 (10 / A6-07)
Scale: 1 : 50

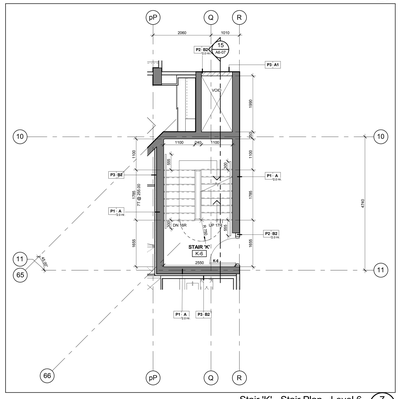

Stair 'K' - Stair Plan - Level 6 (7 / A6-07)
Scale: 1 : 50

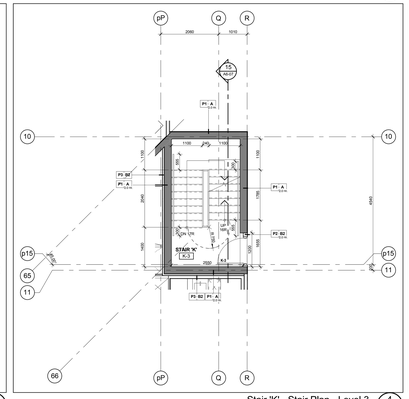

Stair 'K' - Stair Plan - Level 3 (4 / A6-07)
Scale: 1 : 50

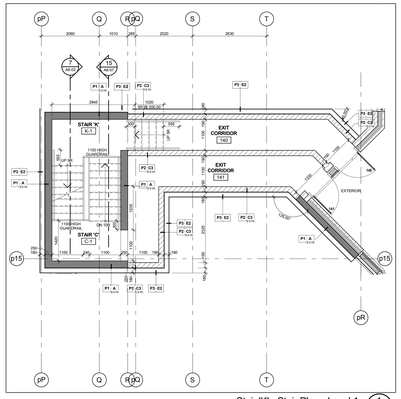

Stair 'K' - Stair Plan - Level 1 (1 / A6-07)
Scale: 1 : 50

Contractor Must Check And Verify All Dimensions On The Job.

Do Not Scale The Drawings.

All Drawings, Specifications And Related Documents Are The Copyright Of The Architect And Must Be Returned Upon Request.

Reproduction Of Drawings, Specifications And Related Documents Is Not Or Wholly Is Forbidden Without The Architects Written Permission.

This Drawing Is Not To Be Used For Construction Until Signed By The Architect.

Date: June 12, 2015

KIRKOR ARCHITECTS AND PLANNERS
ONTARIO
TO BE NOT BE VALID UNLESS SIGNED BY THE ARCHITECT
Building Permit

KIRKOR ARCHITECTS + PLANNERS
20 Martin Ross Avenue, Toronto, Ontario, M3J 2K8
Tel (416) 665-6565, Fx1 (416) 665-1234, www.kirkorarchitects.com

No.:	Revision	Date
2.	Building Permit	June 12, 2015
1.	Waterfront Toronto Review	May 1, 2015
No.:	Issued For	Date

AQUAVISTA
AT BAYSIDE TORONTO

Drawing Title
Stair Plans & Sections
Stair 'K', 'Kx' & 'Ky' Plans and Sections

Project
Hines TRIDEL
AQUAVISTA
Block 3 - R3 & R4
263 Queens Quay East
Toronto, ON

Scale: 1 : 50
Drawn by: M.R.
Checked by: C.A.
Project No.: 13148
Date: June 12, 2015
Drawing No.: A6-07