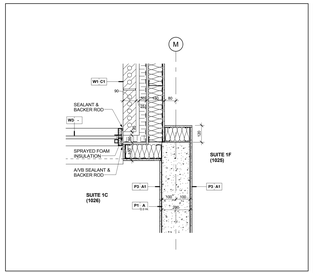

Window Wall & Brick Veneer Wall @ Conc. Wall @ Level 10 (19 / A7-23)
Scale: 1 : 10

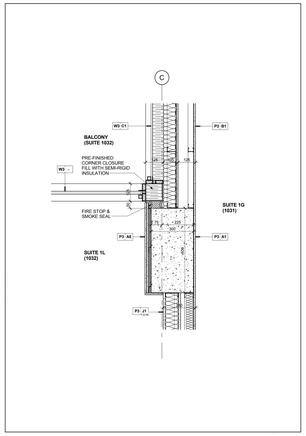

Window Wall & Concrete Column @ Level 10 (15 / A7-23)
Scale: 1 : 10

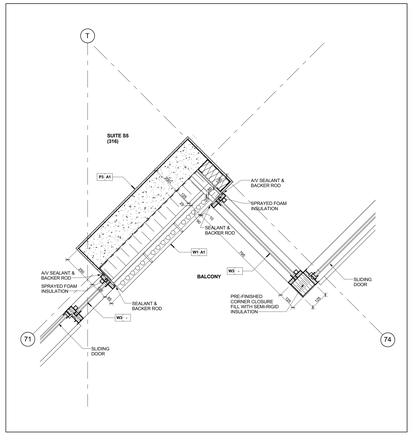

Brick Veneer Wall & Window Wall @ Balcony @ Level 3 (12 / A7-23)
Scale: 1 : 10

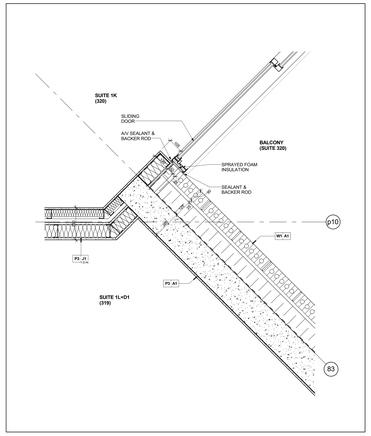

Suite Demising Wall (Metal Stud) & Brick Veneer Wall @ Balcony @ Level 3 (9 / A7-23)
Scale: 1 : 10

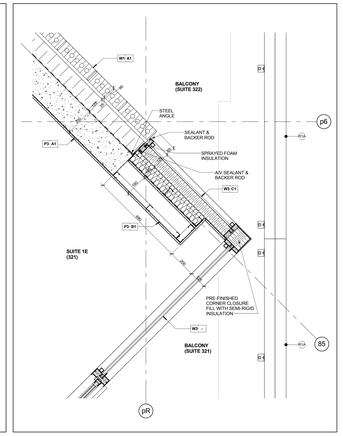

Brick Veneer wall & Window Wall @ Balcony @ Level 3 (6 / A7-23)
Scale: 1 : 10

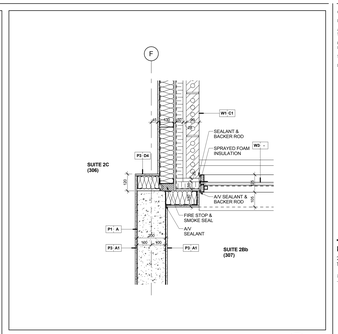

Suite Demising Wall & Brick Veneer Wall @ Level 3 (3 / A7-23)
Scale: 1 : 10

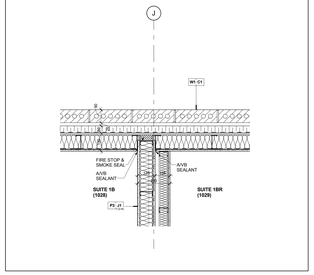

Suite Demising Wall (M/Studs) @ B/ Veneer Wall @ Level 10 (18 / A7-23)
Scale: 1 : 10

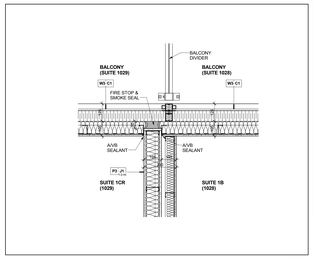

Suite Demising Wall (M/Studs) @ Window Wall @ Level 10 (17 / A7-23)
Scale: 1 : 10

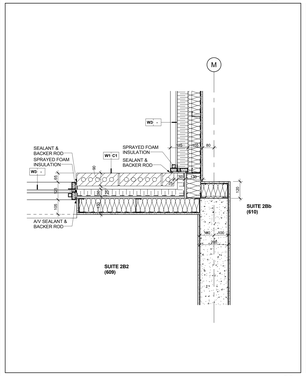

Conc. Demising Wall @ Window & B/ Venner Wall @ Level 6 (14 / A7-23)
Scale: 1 : 10

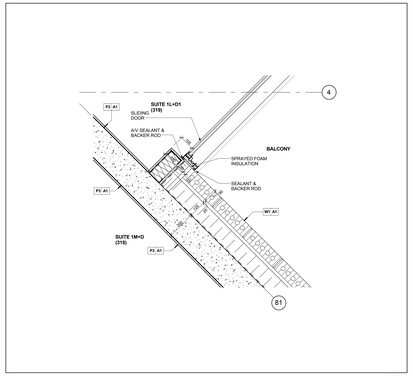

Brick Veneer Wall & Alum. Sliding Door @ Balcony @ Level 3 (11 / A7-23)
Scale: 1 : 10

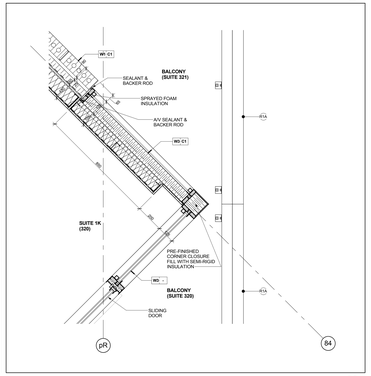

Brick Veneer Wall & Window Wall @ Balcony @ Level 3 (8 / A7-23)
Scale: 1 : 10

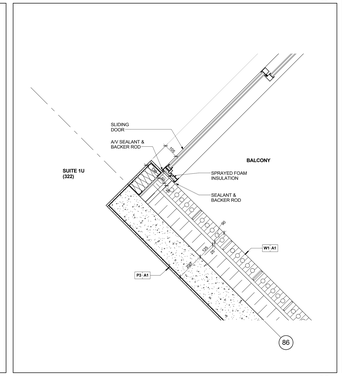

Brick Veneer Wall & Alum. Sliding Door @ Balcony @ Level 3 (5 / A7-23)
Scale: 1 : 10

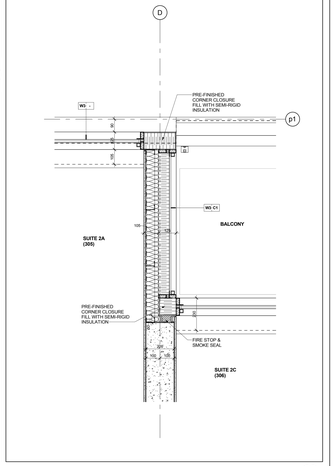

Suite Demising Wall (Conc.) & Window Wall @ Balcony @ level 3 (2 / A7-23)
Scale: 1 : 10

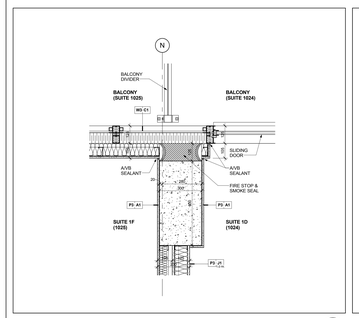

Conc. Column @ Window Wall @ Level 10 (20 / A7-23)
Scale: 1 : 10

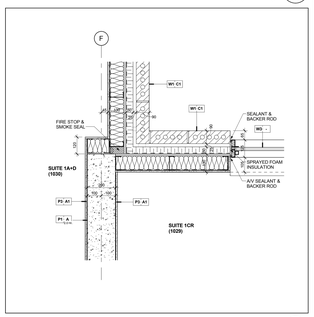

Brick Veneer Wall & Concrete Wall @ Level 10 (16 / A7-23)
Scale: 1 : 10

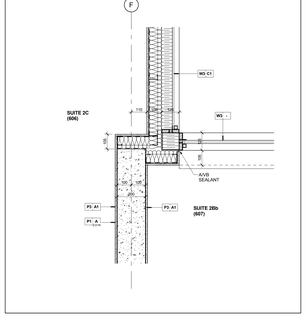

Conc. Suite Demising Wall @ Window Wall @ Level 6 (13 / A7-23)
Scale: 1 : 10

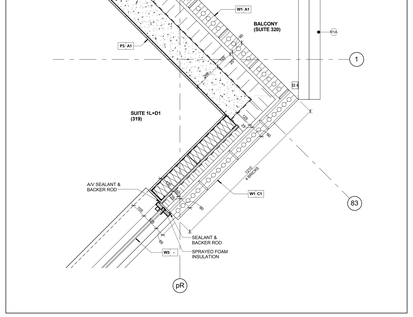

Brick Veneer Wall with Conc. & Metal Stud @ Corner @ Level 3 (10 / A7-23)
Scale: 1 : 10

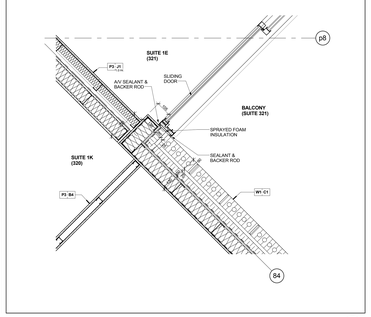

Suite demising Wall (Metal Stud) & Brick Veneer Wall @ Balcony @ level 3 (7 / A7-23)
Scale: 1 : 10

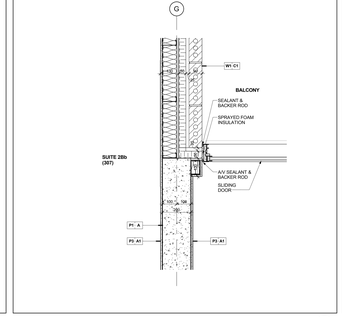

Brick Veneer Wall & Alum. Sliding Door @ Level 3 (4 / A7-23)
Scale: 1 : 10

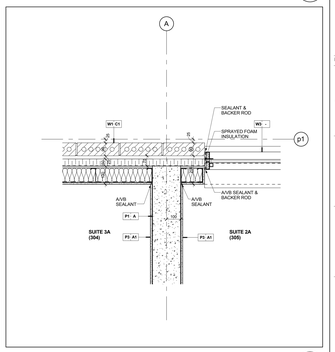

Suite Demising Wall (Conc.) @ Brick Veneer Wall @ Level 3 (1 / A7-23)
Scale: 1 : 10

Contractor Must Check And Verify All Dimensions On The Job.

Do Not Scale The Drawings.

All Drawings, Specifications And Related Documents Are The Copyright Of The Architect And Must Be Returned Upon Request.

Reproduction Of Drawings, Specifications And Related Documents In Part Or Whole Is Forbidden Without The Architects Written Permission.

This Drawing Is Not To Be Used For Construction Until Signed By The Architect.

Date: **October 2, 2015**

ONTARIO ASSOCIATE ARCHITECT
KIRKOR ARCHITECTS and PLANNERS
DATE: OCT. 2, 2015
THIS SEAL MUST BE SIGNED TO BE VALID

Pricing Set

KIRKOR ARCHITECTS + PLANNERS
20 Martin Ross Avenue, Toronto, Ontario, M3J 2K8
TXT 0 665-6065, FXT 0 665-1734, www.kirkorarchitects.com

No.	Revision	Date

PRICING SET
October 2, 2015

No	Issued For	Date

AQUAVISTA
AT BAYSIDE TORONTO

Drawing Title
Plan Details

Project
Hines TRIDEL
AQUAVISTA
Block 3 - R3 & R4
263 Queens Quay East
Toronto, ON

Scale 1 : 10
Drawn by S.D.
Checked by C.A.
Project No. 13148
Date October 2, 2015
Drawing No. A7-23