CLIENT TO CONFIRM ALL EQUIPMENT PRIOR TO DESK CONSTRUCTION

Quantity	1

Notes:

1. FABRICATOR TO CONFIRM QUANTITIES OF FIXTURES WITH CLIENT PRIOR TO FABRICATION
2. PROVIDE SHOP DRAWINGS FOR DESIGNER'S REVIEW AND APPROVAL PRIOR TO FABRICATION
3. FABRICATOR TO ENSURE STRUCTURAL STABILITY OF UNIT
4. FABRICATOR TO EXECUTE DESIGN IN THE MOST COST EFFECTIVE MANNER

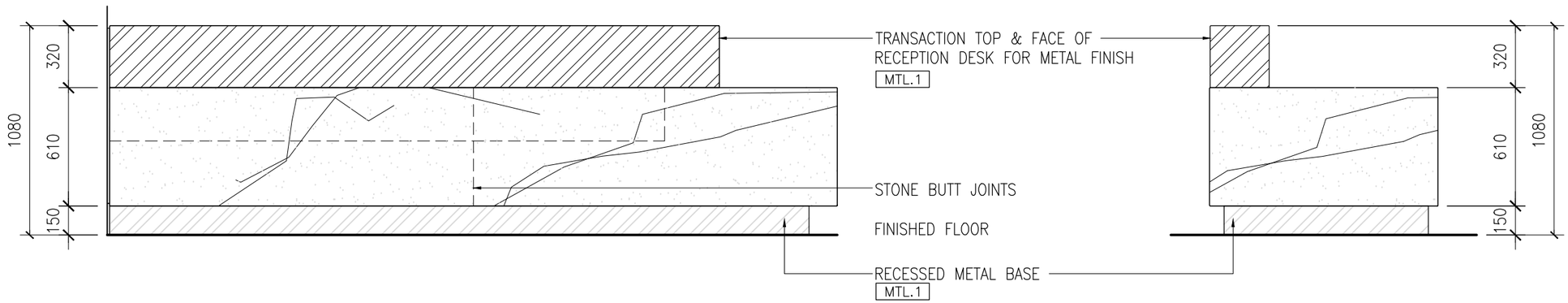

1 D1.02.1 FRONT ELEVATION – CONCIERGE DESK
SCALE 1:25

2 D1.02.1 SIDE ELEVATION – CONCIERGE DESK
SCALE 1:25

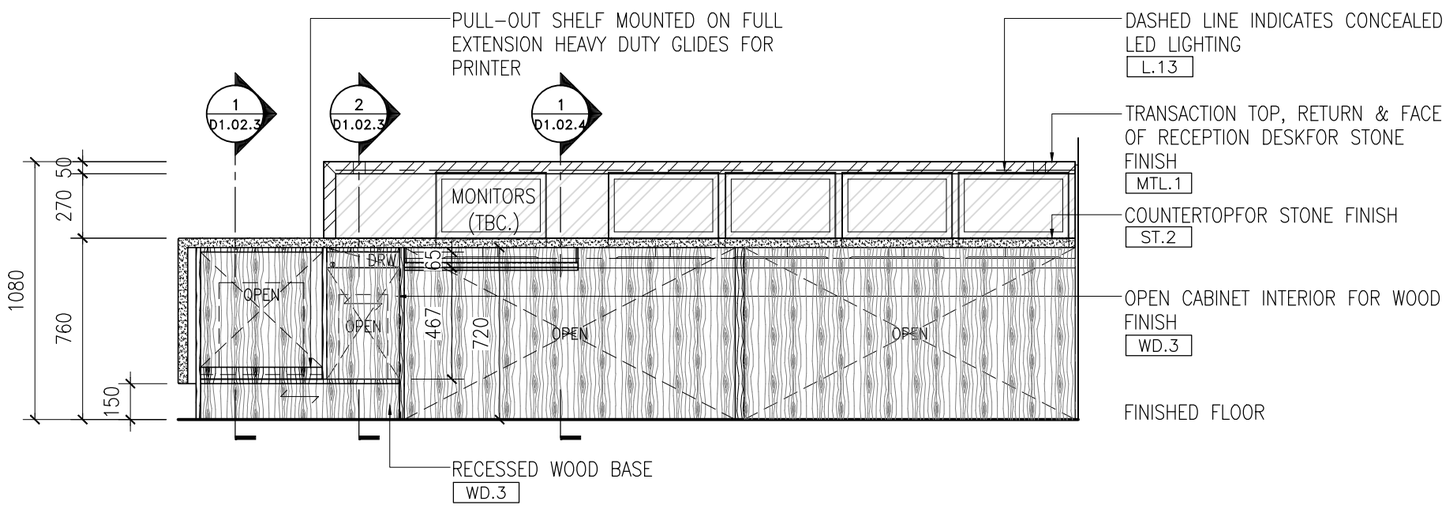

3 D1.02.1 BACK ELEVATION – CONCIERGE DESK
SCALE 1:25

Notes:

1. CONTRACTOR AND ALL SUB-TRADES SHALL VERIFY ALL SITE DIMENSIONS, ALL DRAWINGS, DETAILS AND SPECIFICATIONS AND REPORT ANY DISCREPANCIES TO THE INTERIOR DESIGNERS IN WRITING FOR APPROVAL BEFORE PROCEEDING WITH THE WORK.

2. CONTRACTOR AND SUB-CONTRACTORS, BEFORE PROCEEDING WITH WORK, MUST SUBMIT ALL NECESSARY SAMPLES FOR APPROVAL OF QUALITY AND FINISH TO THE INTERIOR DESIGNER.

3. CONTRACTOR MUST COMPLY WITH THE CONTRACT DOCUMENTS, PERFORMANCE REQUIREMENTS, APPLICABLE CODES AND REGULATIONS.

4. ALL DRAWINGS AND WRITTEN MATERIAL HEREIN CONSTITUTES THE ORIGINAL AND UNPUBLISHED WORK OF " II BY IV DESIGN ASSOCIATES INC. " , AND MAY NOT BE DUPLICATED, USED OR DISCLOSED WITHOUT PRIOR WRITTEN CONSENT OF " II BY IV DESIGN ASSOCIATES INC. "

5. DRAWINGS NOT TO BE SCALED

Issue:

06 ISSUED FOR CLIENT REVIEW	16.01.15
07 ISSUED FOR TENDER	16.03.18
-	-
-	-
-	-
-	-
-	-
-	-
-	-
-	-
-	-
-	-

Hines TRIDEL

AQUAVISTA AT BAYSIDE TORONTO

255 QUEEN'S QUAY EAST, TORONTO ONTARIO

77 MOWAT AVENUE, SUITE 109
TORONTO, ONTARIO M6K 3E3 – CANADA
T + 1 416 531 2224

12 DESBROSSES STREET
NEW YORK, NEW YORK 10013 – USA
T + 1 212 392 4952

II BY IV DESIGN

Drawing Title:

L1 WEST LOBBY CONCIERGE DESK DETAILS

Our Project Number:
14008

Designed By: DM,KR, VW
Detailed By: DM,KR, VW,LN

Drawing Number:

D1.02.1