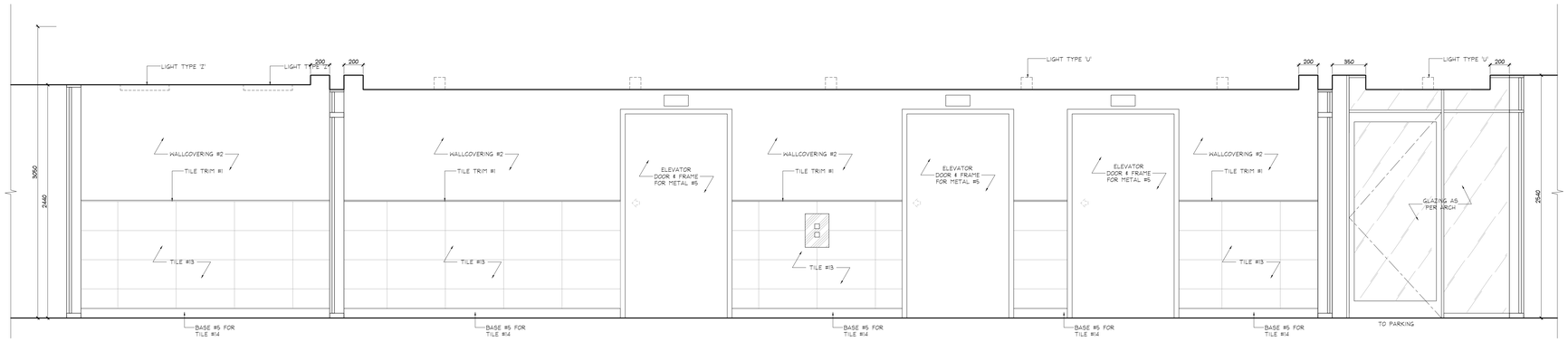


1 ID2.0.1 ELEVATION
P1 LEVEL
ELEVATOR LOBBY
SCALE 1:20

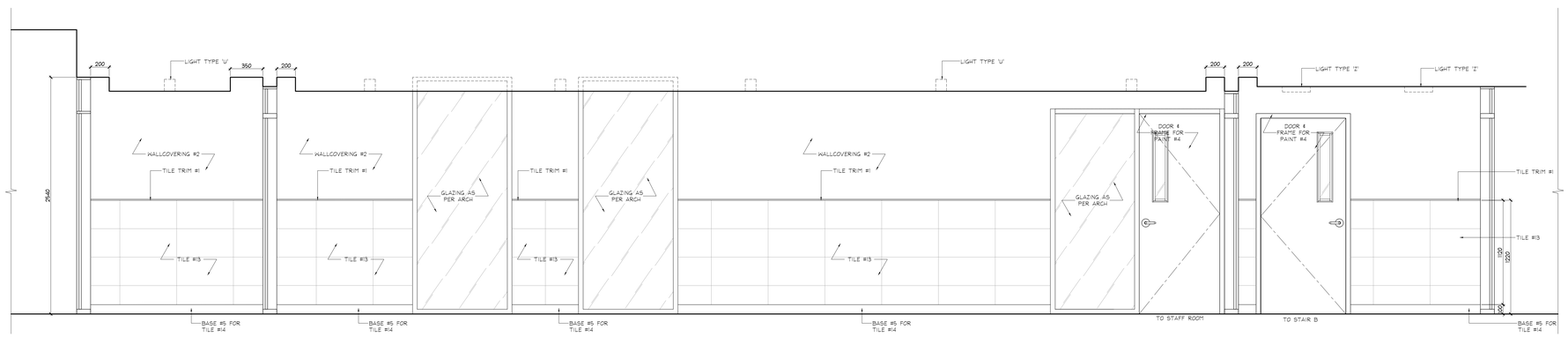


2 ID2.0.1 ELEVATION
P1 LEVEL
ELEVATOR LOBBY
SCALE 1:20

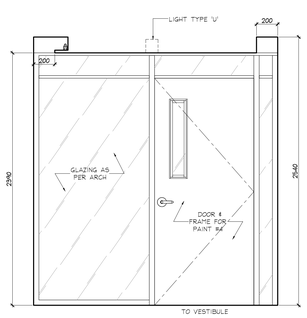


3 ID2.0.1 ELEVATION
P1 LEVEL
ELEVATOR LOBBY
SCALE 1:20

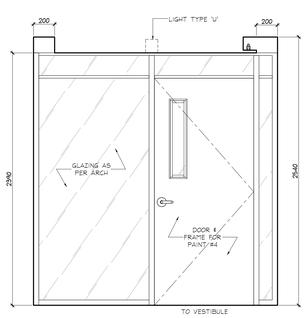


4 ID2.0.1 ELEVATION
P1 LEVEL
ELEVATOR LOBBY
SCALE 1:20

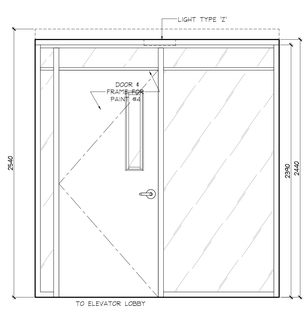


5 ID2.0.1 ELEVATION
P1 LEVEL
VESTIBULE
SCALE 1:20

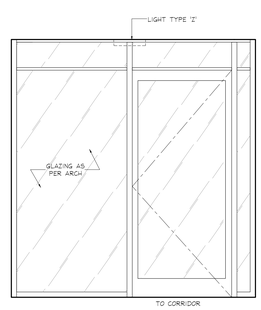


6 ID2.0.1 ELEVATION
P1 LEVEL
VESTIBULE
SCALE 1:20

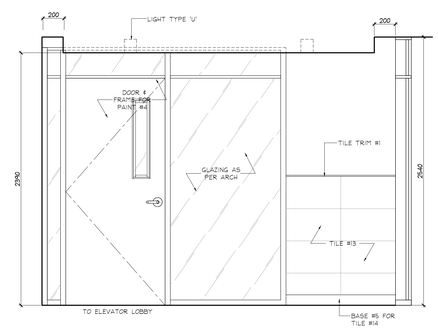


7 ID2.0.1 ELEVATION
P1 LEVEL
VESTIBULE
SCALE 1:20

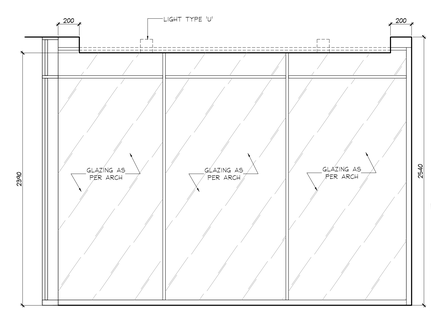


8 ID2.0.1 ELEVATION
P1 LEVEL
VESTIBULE
SCALE 1:20

**DO NOT SCALE DRAWINGS.**

CONTRACTOR MUST VERIFY ALL DRAWINGS, DIMENSIONS, DETAILS AND SPECIFICATIONS, AND REPORT ANY DISCREPANCIES TO *UNION 31 INC.* BEFORE PROCEEDING WITH WORK. MATERIALS MAY NOT BE SUBSTITUTED WITHOUT WRITTEN APPROVAL FROM *UNION 31 INC.*

ALL DRAWINGS AND SPECIFICATIONS ARE INSTRUMENTS OF SERVICE AND THE PROPERTY OF *UNION 31 INC.* WHICH MUST BE RETURNED AT THE COMPLETION OF THE WORK.

PRINTED: 30-May-17

**ISSUED FOR AS-BUILT**

| NO. | DATE | COMMENTS | INI |
|---|---|---|---|
| 01 | 31 MAY / 17 | ISSUED FOR AS-BUILT | SV |

REVISIONS:

UNION31

**UNION31 INC.**
183 BATHURST STREET, STE 201
TORONTO, ON, M5T 2R7, CANADA
TEL: 416-597-1576 FAX: 416-597-2139

PROJECT NAME:
ALEXANDRA PARK
MAIN BUILDING
BLOCK 11
ON, Canada

PROJECT NO.: 13-949

DRAWING/S:
PARKING LEVEL
ELEVATIONS

| | | | |
|---|---|---|---|
| DATE STARTED: | 07 AUG / 13 | DRAWING NO.: | ID 2.0.1 |
| SCALE: | 1 : 20 | | |
| DRAWN BY: | AP | | |
| APPROVED BY: | KC | | |

36 x 48